LIBRARY OF THE
UNIVERSITY OF ILLINOIS
AT URBANA-CHAMPAIGN

510.84
Il6r
no. 279-286
cop. 2

CENTRAL CIRCULATION BOOKSTACKS

The person charging this material is responsible for its renewal or its return to the library from which it was borrowed on or before the **Latest Date** stamped below. **You may be charged a minimum fee of $75.00 for each lost book.**

Theft, mutilation, and underlining of books are reasons for disciplinary action and may result in dismissal from the University.

TO RENEW CALL TELEPHONE CENTER, 333-8400

UNIVERSITY OF ILLINOIS LIBRARY AT URBANA-CHAMPAIGN

9/17/96

SEP 06 1996

When renewing by phone, write new due date below previous due date. L162

Digitized by the Internet Archive
in 2013

http://archive.org/details/tricolorcartogra282kubi

Ill6r
no. 282

REPORT NO. 282

Math

COO-1469-0102

A TRICOLOR CARTOGRAPH

by

William J. Kubitz

SEPTEMBER, 1968

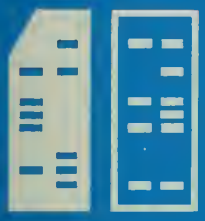

DEPARTMENT OF COMPUTER SCIENCE · UNIVERSITY OF ILLINOIS · URBANA, ILLINOIS

THE LIBRARY OF
1968
UNIVERSITY OF ILLINOIS

Report No. 282

A TRICOLOR CARTOGRAPH *

by

William J. Kubitz

September, 1968

Department of Computer Science
University of Illinois
Urbana, Illinois 61801

* Submitted in partial fulfillment for the Doctor of Philosophy Degree in Electrical Engineering, at the University of Illinois, September, 1968.

A TRICOLOR CARTOGRAPH

William John Kubitz, Ph.D.
Department of Electrical Engineering
University of Illinois, 1968

A system for coloring the interior of closed boundaries on a television-like display is described. The coloring is accomplished in a semi-automatic manner by using a light pen to indicate any point on the interior of the boundary. Given any interior point, the system will color all or most of the entire interior area automatically. The colors are chosen by the operator from red, blue, green and their combinations. Local writing and erasing on the color display is also allowed. The system is a self-contained display console and does not rely on the back-up of a general purpose digital computer. Boundaries may be input directly be means of the light pen or by a television camera or a flying spot scanner. A discussion of the problems associated with the automatic coloring of closed bounded areas is given.

ACKNOWLEDGMENT

The author wishes to express his appreciation to Professor W. J. Poppelbaum for suggesting the overall system as well as his advice and guidance, to the members of the Hardware Research Group for their helpful discussions, to Carla Donaldson for the typing and to the Drafting Department of the Department of Computer Science for making the drawings.

TABLE OF CONTENTS

		Page
1.	Introduction	1
2.	The Problem of Coloring	6
	2.1 Theoretical Requirements	6
	2.2 Practical Requirements	8
3.	Realizable Solutions and Restrictions	9
	3.1 The Memory	9
	3.2 The Processor	15
	3.3 The Display	23
4.	Description of System	24
	4.1 Brief Review of Television Concepts	24
	4.2 Physical Description	26
	4.3 The Pen	28
	4.4 The Display	30
	4.5 The Memory	31
	4.6 The Processor	33
	4.6.1 The Total Erase Operation	33
	4.6.2 The Pen Modes	33
	4.6.3 The Coloring Operation	34
5.	Discussion of Results, Suggested Improvements and Conclusions	48
APPENDIX		54
BIBLIOGRAPHY		108
VITA		109

LIST OF FIGURES

Figure		Page
1.	The Tricolor Cartograph	3
2.	An Automatically Colored Figure	5
3.	Open Boundaries and Multiply Connected Regions	7
4.	Scanning Methods	17
5.	Boundary and Pen Tracing	19
6.	Problem Boundaries	21
7.	Tricolor Cartograph	27
8.	Tricolor Cartograph Block Diagram	29
9.	Top and Bottom Point Location	36
10.	Left and Right Point Location	37
11.	Coloring the Entire Figure	39
12.	Timing Diagram for Coloring Operation	40
13.	Errors in Finding the Right and Left Points	44
14.	Simplified Diagram of Coloring Logic	47
15.	The Bleeding Problem	49
16.	Leakage Through a Gap	51
17.	Control and Video Logic	56
18.	Coloring Logic	60
19.	Pen Preamplifier 1469-121	71
20.	Counter Buffer 1469-133	72
21.	Horizontal Counter 1469-134	73
22.	Dual 9-Bit Register 1469-135	74
23.	8-Bit Register and Coincidence 1469-136	75
24.	R-S Flip Flop 1469-137	76

Figure Page

25. Vertical Counter 1469-138 77
26. 9-Bit Register and Coincidence 1469-139 78
27. Switch Matrix 1469-140 79
28. 2-Bit Coincidence and R-S Flip Flop 1469-141 80
29. Total Erase Control 1469-145 81
30. Level Shifter 1469-156 82
31. One Shot Buffer 1469-159 83
32. General 2-Input Nand 1469-161 84
33. General 3-Input Nand 1469-162 85
34. Switch Filter 1469-173 86
35. Logic to Video Converter 1469-175 87
36. Indicator 1469-176 88
37. Video to Logic Converter 1469-177A 89
38. +1 Volt Power Supply/Mode Switch 1469-178 90
39. Pen Shaper and Gate 1469-179 91
40. 3-Input Video Adder 1469-180 92
41. General 4-Input Nand 1469-181-20 93
42. General J-K Flip Flop 1469-181-70 94
43. Voltage Controlled Oscillator 1469-184 95
44. Main Junction Box 96
45. Display Junction Box 97
46. Circuit Breaker Panel 98
47. Modular Power Supplies 99
48. Switch Panel 100
49. Cable Details 101

1. INTRODUCTION

In recent years great interest has developed in the area of graphical displays and graphical display systems. This interest has resulted primarily from the increasing use of large digital computers for information processing. Because these computers are capable of generating large amounts of information at high rates, it has become necessary to search for means of information display which can more nearly match their speed. In addition, there is a continual search for some better means of communication between man and his machines and it is thought that some improvement can be obtained by the use of visual display techniques. A cathode ray tube display is probably the most common type in use today. However, there are many other types in current use ranging from small arrays of light bulbs to large screen types involving projection techniques. Although most displays are black and white in nature, a few do utilize color. Often, the additional complexity of color is not considered worthwhile for a given application. However, color will probably become more popular in the future when some of the technical problems associated with its use are overcome.

For displays associated with computers, until recently the common practice was to operate the display directly from the computer. This technique becomes troublesome when the amount of information on the display becomes large because considerable computing time and memory space are utilized just to regenerate the display. With the advent of the time-sharing concept for efficiently and conveniently utilizing large computers, some consider it only natural that each remote station have a display. Thus, the recent trend has been toward having a local buffer store associated with the display unit. Even more recently, there

appears to be a return to a raster-scan type display in contrast to the character generation type scan currently in use. The reasons for these changes are partly technological and partly practical. Practically, they are a result of the desire to present more data and posess more versitility in the display format. Technologically, they are the result of the development of high density storage at a reasonable cost and recognition of the already advanced state of standard television techniques.

Concurrent with and in association with these recent developments in computer displays there has been an upsurge of interest in specilaized digital systems which although lacking the versitility of the general purpose computer, perform some specialized operations much more simply and more efficiently than the general purpose machine. Quite probably the future will bring many specialized "computers", some of which will have displays associated with them and most of which will be connected to a large central machine which can be called upon in the few instances when its use is required.

The Tricolor Cartograph (Figure 1) is a specialized display system which is restricted in its operations. It is self-contained and is not associated with a general purpose digital computer. It consists of a color display unit with a light pen and associated control buttons. The operator sits in front of the display and uses the light pen and buttons to perform certain operations. The operations which can be performed are: writing on the display with the pen in choice of color, erasing from the display with the pen in choice of color, drawing or erasing closed outlines on the display with the pen (in white), totally erasing any color or all outlines from the display and designating the interior of any closed outline which is to be colored-in with a previously

Figure 1. The Tricolor Cartograph

selected color. The color information which is displayed is stored as a video signal on a magnetic disc. Figure 2 shows an example of a figure which has been automatically colored on the Tricolor Cartograph.

Thus, the Tricolor Cartograph is a color graphical display system with self contained storage which can perform a few specialized operations independently of a central computer system. In particular, it can relieve a central processor from the duties of the storage of graphical information and the coloring of large irregular areas.

There are many possible uses for a system which can perform automatic coloring. Some possible areas of use are air traffic control, radar, map layout, printed circuit mat layout, pictorial computer simulation and sketching. It may be possible some day for an artist to "paint" a picture on such a display and then obtain a color reproduction from a color facsimile machine.

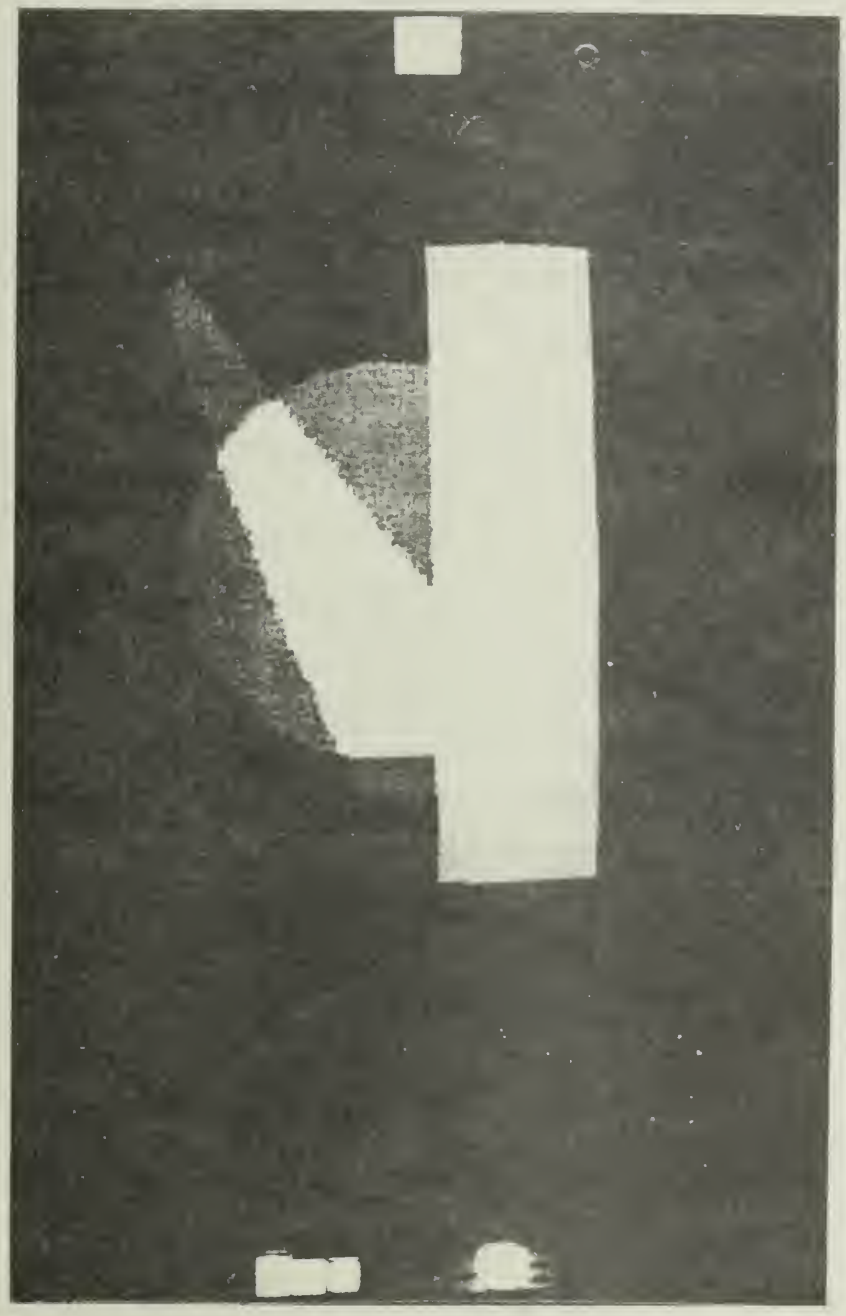

Figure 2. An Automatically Colored Figure

2. THE PROBLEM OF COLORING

2.1 Theoretical Requirements

In order to color the interior of a figure or a part of a figure, certain information about the figure must be known; namely, the color and which area is to be colored.

The color is a matter of choice for the operator. Color is characterized by two quantities, the hue and the saturation. Hue pertains to the actual color and saturation to the shading or grayness of the hue. Of course, both of these are arbitrary choices and vary over a fairly large continuous range (blue to red, white to black). In a practical system it is usually necessary to place limitations on this range.

The area to be colored is defined by a boundary. If the boundary is not closed or if it bounds a multiply connected region, additional information is required in order to define what is to be colored. Thus, the following rules are established for the purpose of discussion: If the boundary is not closed, it is assumed that both the inside and outside are to be colored. The outside consists of all the area within the next largest closed boundary in the case of multiple boundaries or the whole plane if there are none. In the case of multiple connected regions, the coloring takes place only in the region designated and does not cross into an adjacent region, unless of course there is a gap in the boundary. To put it simply, the coloring covers the largest area with a closed boundary and does not cross closed boundaries. These cases are illustrated in Figure 3. In theory, the solution to this problem is simple: Given an initial point known to be inside the boundary, color all adjacent points not on or beyond a boundary. Although this

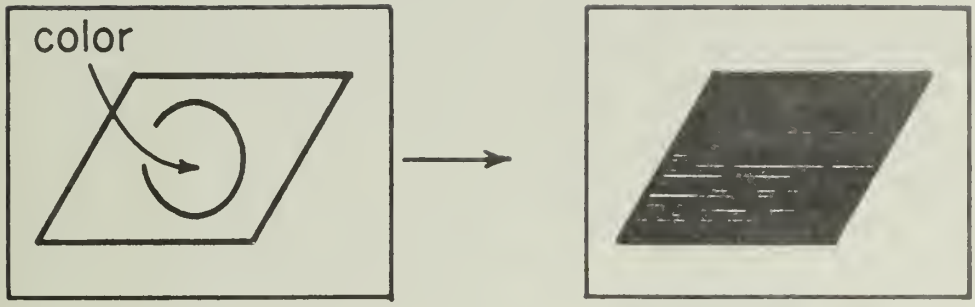

A. Open Boundary

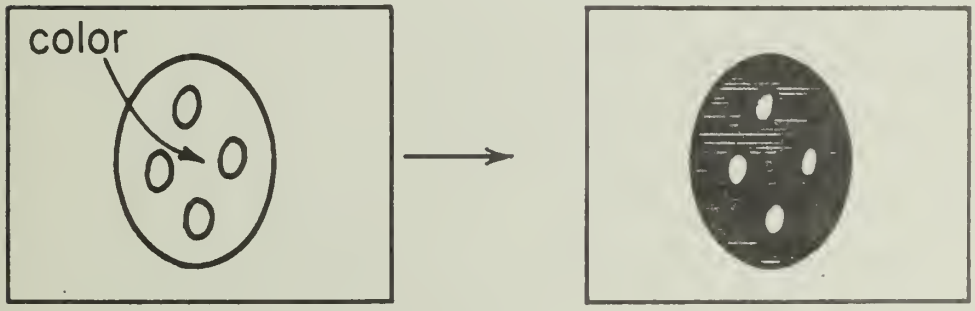

B. Multiply Connected

Figure 3. Open Boundaries and Multiply Connected Regions

method can be realized, it is not simple or practical for large numbers of points. Because of this, other methods were explored. These are discussed in Section 3.

Thus, from a theoretical point of view the following information must be known: the closed boundary, the hue, the saturation and some point which determines in some way which side of the boundary the coloring is to begin on (an initial point).

2.2 Practical Requirements

At this point in the discussion four requirements of the coloring system have been stated. The color (hue and saturation) must be known, the closed boundary must be known and a defining point must be given. In order to accomplish reasonable automatic coloring in an electronic system, some other requirements must be added. First, the actual coloring must be accomplished in a reasonable time (0.1 - 0.2 seconds for example). Second, it must be accomplished at a reasonable cost. Third, the coloring operation should be as automatic as possible, requiring a minimum number of manipulations by the operator. Fourth, the resolution and registration of the colored area and the outline should be good.

Thus, there are four theoretical requirements and four practical requirements which must be satisfied in order to accomplish reasonable automatic coloring.

3. REALIZABLE SOLUTIONS AND RESTRICTIONS

In addition to the theoretical and practical requirements of the coloring operation, in a realizable system it may be necessary to impose certain restrictions depending on the choice of memory, control and display units to be used. In the following sections these restrictions are discussed with regard to particular choices of the memory, display and control.

3.1 The Memory

In order to attain what is commonly called a "flicker free" display it is necessary that the memory be continuously read out and displayed. This requirement can frequently be relaxed to some extent by utilizing a display tube with long persistence. Such is not the case for color since there is no color tube with long persistence available.

A necessary requirement of the system is the capability of writing into the memory with the light pen in order to write and draw boundaries on the display. Therefore, the memory must possess a local writing capability. It is also desirable that local erasure be available so that one may make small corrections to what has been drawn or written on the display. Also, it is necessary to possess the capability of totally erasing all colors and all outlines. In addition, the storage should be indefinite so that the display may be viewed for long periods of time without noticable deterioration. Finally, the memory must possess enough capacity to allow storage of the required information.

For a resolution of 500 lines vertically and horizontally, 250,000 elements must be stored. Since there are three primary colors the number of required elements increases to 750,000. The fact that

750,000 are required rather than 500,000 results from the fact that the three primaries yield eight possible signals: red, blue, green, cyan, yellow, magenta, white and black. Thus, although two bits is sufficient to encode the individual colors red, blue and green, three bits are required if all combinations are allowed. Storage of the outlines (boundaries) in addition to the colors results in a total of 10^6 stored elements. If shades of gray are desired and must be stored digitally then two bits are required for each color for four shades of gray. This requires 1.5×10^6 bits for the colors, 0.25×10^6 more for the outlines (assuming no shades of gray) for a total of 1.75×10^6 bits. If the shades of gray can be stored as an analog signal then the capacity required is 10^6 bits (250K for each color and the outline). Of course, at any given time the actual capacity being used would normally be less than any of these figures. However, since there is no restriction on the size or shape of the objects written on the display, the capability for storing these capacities must be present. As an alternative scheme to storing the individual picture elements one could, for example, consider storing a point by means of storing the address of the point on the display instead of the point itself. For a 500 x 500 display this requires the storing of 9 bits for the X address, 9 bits for the Y address and 3 bits for the color or for each point, a total of 21 bits. Thus, for the same memory capacity (750K) only 1/7 (14%) as many points can be stored. This is clearly inadequate for large colored areas which can easily cover 80% of the screen. In addition, it would be impossible to maintain a reasonable regeneration rate if each point had to be decoded and converted to an analog signal in order to generate the appropriate deflection for displaying that element. Finally, it should be mentioned that 500 elements

horizontally results in a capability of storing 250 line pairs (alternating black and white for example). Thus the actual number of lines resolution (white on a black background or vice versa) for 500 elements is 250. Also, in order to read out 500 elements in a standard television format, a reading rate of 10^7 bits/sec is required. (See Section 4 for a discussion of the standard television format.)

Various types of storage media are available today which can be considered for possible use: magnetic tape, magnetic cores, magnetic drum, magnetic disc, direct view storage tubes, electrical in - electrical out storage tubes and scan conversion tubes.

Magnetic tape is not suitable for graphical storage because of insufficient reading rate and the unavailability of local erase capability. Although commercial color recorders are available (which do not have local erase capability), they usually utilize NTSC encoding or some similar scheme. Under these conditions the color information is of low resolution. The addition of local erasure to this type of system is difficult since the information stored on the tape is encoded. Finally, the cost of these machines is quite high.

A core memory could be used if the required capacity could be achieved at a reasonable cost. In order to read out of such a device, 500 bits are required in 50 μsec or one 64 bit word every 6 μsec. This would be no problem for some memories available. However, the cost of such a device is high enough to make it impractical. Added to the cost of the core memory, of course, is the additional circuitry required to convert from a parallel readout to the serial readout as required by the display.

A magnetic drum could be used. In order to achieve the required reading rate, however, a large drum would be required. Again

the cost of such a device is high. Nonetheless, some current display systems are successfully making use of drums.

It is also possible to use a direct view electrostatic storage tube. The direct view tube has electrical signal input and a visual display for output by means of a viewing screen. This type tube suffers from the disadvantage that in order to achieve electrical readout, it is usually necessary to view the tube with a photo sensitive pick-up device. This type of memory cell was investigated in the ARTRIX project at the University of Illinois Digital Computer Laboratory. In addition to the difficulties associated with obtaining readout, these tubes have low resolution for long persistence and short persistences for high resolution. Recently, Tektronix has developed a tube with about 15 minutes storage time and a resolution of 800 (TV) lines vertically and 600 (TV) lines horizontally. The tube is large, however, so that the density is only about 95 (TV) lines/inch. The writing speed of this tube is also low. Even with these disadvantages, this tube is an improvement over what has been available in the direct view storage tube field. Lack of local erasure capability is another disadvantage of these tubes.

Another type of storage tube has electrical input and electrical output and is frequently used for scan conversion. The problems associated with these tubes are short storage time under continuous readout operation and beam registration problems when switching tube potentials in order to go from a writing mode of operation to an erasing mode of operation. These tubes do have adequate writing speed and excellent resolution, however.

A storage tube with inverse properties would be very useful for coloring. In such a tube the storage surface would be conductive until it had been written on by an electron beam or incoming light. In an area

where it had been written it would then become insulating. If the insulated area is the boundary of the region to be colored, then a small amount of charge deposited inside the region initially will spread uniformly over the interior of the boundary. Upon scanning the tube, an electrical signal will be produced which represents the area which was to be colored. The possibility of such a device is being explored at the University of Illinois Digital Computer Laboratory. The major drawback to this scheme seems to be finding a material which becomes non-conducting rather than conducting under some form of exitation. It may be possible to use the usual photoconductive effect in conjunction with a black trace cathode ray tube instead, however.

Finally, the magnetic disc is a possible storage media. Until recently, the disc did not possess sufficient storage or a high enough reading rate. However, current announced devices are approaching the necessary rate and capacity for the storage of pictorial information. These new discs are manufactured by Data Disc, Inc. of Palo Alto, California. Data Disc uses a proprietary method of producing their discs along with in-contact heads to achieve digital storage of 10^5 bits/track and bit rates of 3×10^6 bits/sec for a 12" disc. It is possible to get 64 tracks on a disc for a storage capacity of 64×10^5 bits. Specifications claim video recording frequencies up to 4.2MHz and recording has been done up to 5MHz. Under development are higher capacity disc systems.

A comparison of possible storage media is shown in Table 1. As indicated by the table, the disc possesses local write and erase, total erase, continuous read and long-term storage capability. In addition, it can store 4 or 5 shades of gray. For these reasons the disc was chosen as the memory element for the Tricolor Cartograph. Because the capacity for the disc chosen is 10^5 bits with a bit rate of 3×10^6, the

COMPARISON OF MEMORIES FOR TRICOLOR CARTOGRAPH

REQUIREMENT \ STORAGE MEDIA	TAPE	CORE	DRUM	DISC	DIRECT VIEW STORAGE TUBE	SCAN CONVERTER
CONTINUOUS READ	X	X	X	X	X	X?
LOCAL WRITE	X	X	X	X	X	X
LOCAL ERASE	?	X	X	X	-	?
TOATL ERASE	X	X	X	X	X	X
INDEFINITE STORAGE	X	X	X	X	X	-
CAPACITY AND READ RATE	-	X?	X?	X?	-	X
COST	H	H	H	M	M	H
GRAY LEVEL STORAGE	X	X?	X?	X	-	X

H = HIGH M = MODERATE

TABLE 1.

resolution of the system cannot be 500 elements. A discussion of the characteristics of the actual system will be found in Section 4.

It should be pointed out that storage units with insufficient reading rates can be used by multiplexing several channels and using an intermediate fast storage media. Such methods were considered to be too complex and were thus not considered. What was desired was a memory which could be read and displayed without complex interfacing.

3.2 The Processor

The major problem associated with the processor is that of detecting the boundaries of a figure such that their location is determined in some meaningful way. If one assumes that the format of the pictorial data can take any form, then several scanning methods seem to offer promise as a means of boundary detection. These are: the spiral scan, the radial scan, the bounce scan and the lineal scan with and without pen or boundary tracing. In addition, a boundary enumeration scheme can be considered with the lineal scan.

For the spiral scan, the scanning of the boundary is done starting at a point indicated by the light pen (and known to be inside the boundary of interest) and spiraling out from this point until it intersects a boundary. During the time it is spiraling, coloring takes place. One disadvantage of this method is that the only figure that could be colored in one operation is a circle. A scheme could be implemented which would only sense the boundary (allowing the scan to continue) and stop the coloring, allowing it to commence again after again sensing a boundary. With this scheme, coloring would result after each even number of intersections with a boundary. The possible occurrence of adjacent boundaries and cusps, however, eliminates the usefulness of this scheme.

Use of a radial scan is also possible and would probably yield somewhat better results than the spiral scan for most figures. For the radial scan, scanning again begins at a point determined by the light pen and radiates from it while slowly moving about it in a circular manner. However, it, too, could not cover all of a figure in one operation and in addition, it suffers from non-uniformity since adjacent scan lines diverge with increasing distance from their starting point.

The lineal scan consists of scanning the figure with parallel scans. These could be horizontal, vertical or at some oblique angle. With this method, given the initial point, it would be necessary to scan both ahead of and behind this point (unless it was on the boundary). Again, it would not be possible to cover all of some figures in one operation utilizing a single scanning direction. If, however, two orthogonal directions can be used it is possible to color the entire figure. In this case, however, it is difficult to determine when to cease scanning in one direction and commence scanning in the other. The radial, spiral, and lineal methods are illustrated in Figure 4.

It is interesting to note in passing that when a human colors a bounded area with a pencil, all of the above methods are put in use.

These three scanning methods all require some means of sensing when the boundary has been reached. This means that when the scan reaches a boundary, a signal must be produced to signify this fact. If such a signal could be generated, it would be possible to confine the scanning to the interior of the boundary. Under these conditions the bounce scan could be used.

The bounce scan consists of scanning in a given direction until a boundary is encountered at which time the scan is reversed and directed away from the boundary and continues until the entire interior has been

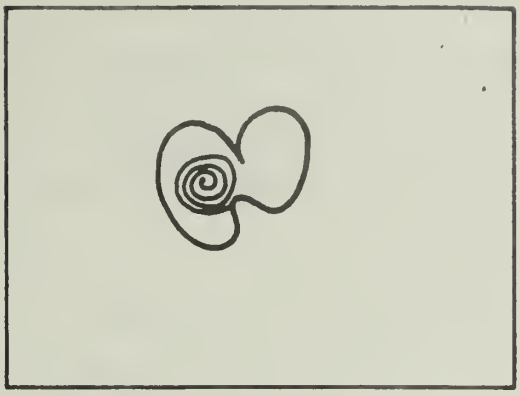

A. Spiral

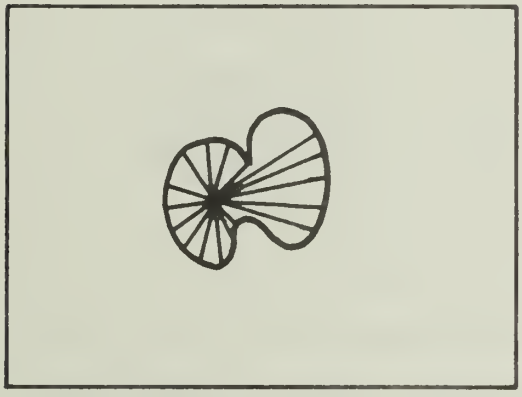

B. Radial

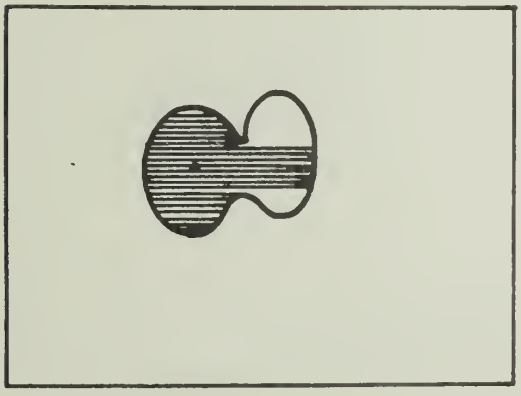

C. Lineal

Figure 4. Scanning Methods

covered. The disadvantages of this method are difficulties in implementation of such a scanning system and the problem associated with sensing when the coloring operation is complete. In order to sense when the operation is complete, it is necessary that some control be exercised over the directions of the various bounces of the scan. In other words, some systematic method of bouncing would be required.

If one is willing to impose more restrictions on the operator, other scanning methods can be used. Thus, if the operator is required to move the pen from the upper extremity of the figure to the lower extremity of the figure (remaining inside the boundary) and a lineal scan is used, coloring can be done line by line as the pen is moved across the figure. If a television like scan is used, it is a simple matter to color all lines starting at the pen and stopping at the next boundary. Coloring between the boundary prior to the pen and the pen itself is not simple since the boundary has already been passed when the location of the pen is sensed. This area would have to be colored on a succeeding pass, which for a television type scan is too much later to be practical.

This latter difficulty can be circumvented by requiring the operator to pass the pen either along the boundary or just ahead of it (with respect to the scan). Under these circumstances, the coloring can be done between the next two boundary points. Of course, this method would still not completely color some figures. In addition, the coloring would most certainly be erroneous if the operator happened to go above the upper extremity of the figures or below the lower extremity since in that case the next two boundaries (if they exist) would not be part of the one which was being used. These three methods of boundary and pen tracing are shown in Figure 5.

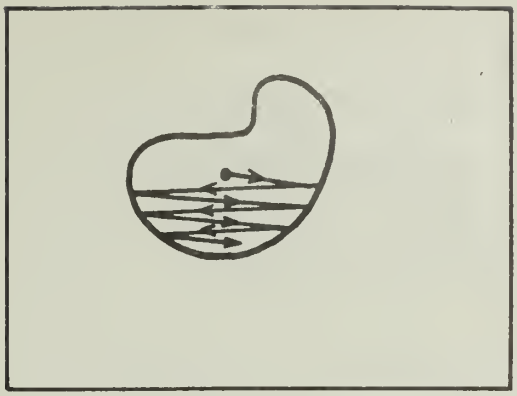

A. Bounce Scan

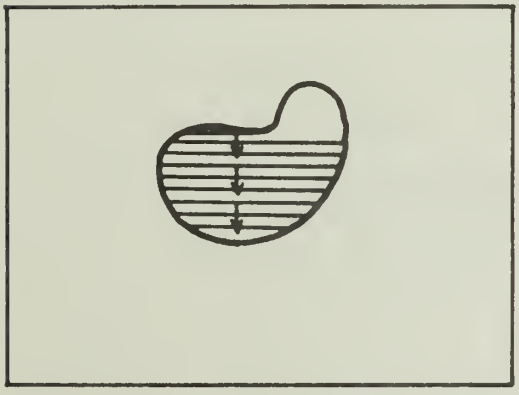

B. Interior Pen Tracing

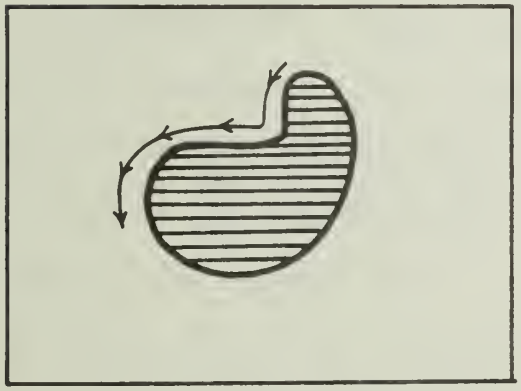

C. Exterior Pen Tracing

Figure 5. Boundary and Pen Tracing

No matter what scanning method is used there are certain boundary configurations which can cause problems. These configurations consist of the cases in which the boundary either becomes tangent to the scan or divides into two or more boundaries. Some cases for which this occurs are the cusp, the lobe and the branch as shown in Figure 6. The cusp and lobe could cause difficulties insofaras they appear as only one point when the scan is tangent to their tip. This same problem exists for a boundary which is parallel to the scan. The existence of these boundary configurations rules out coloring schemes which rely on the enumeration of boundary points since when these configurations occur they appear as one, two, three or even more points.

In view of the foregoing discussion, it is clear that the basic problem associated with the scanning of the figure is determining when the scan is inside and when it is outside the boundary of interest. In addition, it cannot be just any boundary but the boundary. Information on the boundary is available regularly in the process of generating the display. However, since the disc has been shown to be the only storage media which is both suitable and available, its use fixes the format of the data. This format is serial so that information about the boundary is available only periodically. Unless the boundary information is re-written in another form, it will be necessary to synchronize the scanning of the boundary with the periodically appearing boundary information. Of course, by utilizing a scan converter the disc output may be transformed into any other type of format. This is also accomplished if the serial disc information is scanned in a non-lineal manner by sampling the disc output appropriately. This results in a very low effective scanning rate, however. By utilizing a scan converter the spiral, radial or lineal scanning method may be employed. The cost of a scan converter is such as

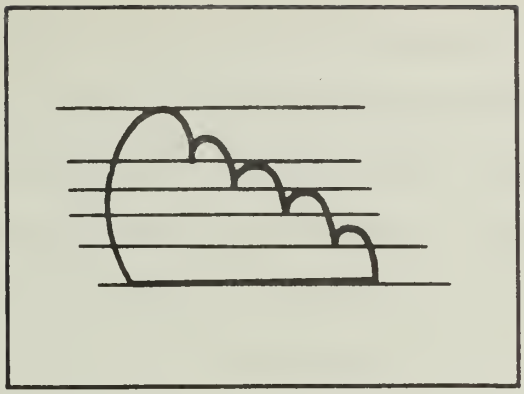

A. Cusp

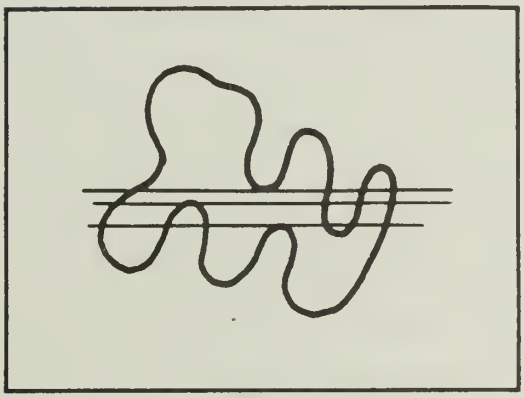

B. Lobe

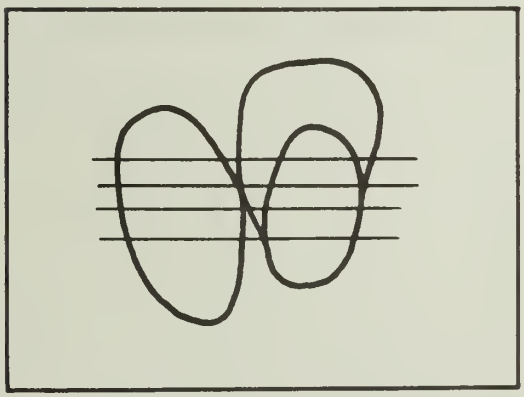

C. Branch

Figure 6. Problem Boundaries

to rule out its use in a project the size of the Tricolor Cartograph. Besides cost there are operational problems such as: the time required to read and write between the scan converter and the disc, the difficulty of erasing locally with good registration, the problems associated with attempting to write (in order to do the coloring) and read (in order to sense the boundaries) simultaneously and the fact that it is difficult to prevent the transfer of the outline back into the color memory after the coloring operation is complete.

Clearly, it would be desirable if the disc output could be used directly. As a result, a lineal scan which runs synchronously with the disc is used in the Tricolor Cartograph. This means that the boundary information from the disc occurs, in time, when the scan reaches the boundary. In order to store positional information in the system, two counters are used. The horizontal counter digitizes each horizontal scanning line into 9 bits. The vertical counter counts the number of scanning lines. Thus, the horizontal count is an indication of position on a given scanning line and the vertical count determines which scanning line. These two counters allow the digital storage of coordinates in the form of a 9 bit horizontal and a 9 bit vertical binary representation. During the coloring operation, the required initial point is determined by the placement of the light pen when the operator indicates some point within the interior of the chosen boundary. The coordinates of this pen location are stored at this time and used as a reference point during subsequent operations. While coloring, there are two boundary points of interest on each horizontal scanning line. These are defined to be the last boundary point preceding the horizontal pen position and the first boundary point following the horizontal pen position. The horizontal pen position referred to is that position which was stored initially when the

operator designated an interior point. In order to color all of some figures with this scheme, more than one pen placement will be required. Since the boundary point preceeding the pen position is not sensed until after the pen position has been passed, it is then too late to color on that scan. In order to color the proper line, a wait of an entire frame would be required. To avoid this, the coloring is delayed just one line. This means that there will be a misregistration of two lines for the coloring (the system is interlaced). Since most figures have boundaries which are slowly varying, this misregistration should not be noticable. A complete description of the method used is contained in Sections 4 and 5.

3.3 The Display

Although various methods of displaying color information are in use currently, only some type of color cathode ray tube is both suitable for a small console and available at a reasonable cost. Of the color tubes which have been proposed only the familiar tricolor tube is in widespread usage. Thus, the display unit of the Tricolor Cartograph utilizes a three color television monitor having a tricolor tube as its display element. Since these monitors are designed for standard 525 line television they are directly compatible with the disc memory which is also designed to operate at standard television rates.

4. DESCRIPTION OF SYSTEM

Before embarking on a description of the operation of the Tricolor Cartograph, a brief review of standard television concepts will be given.

4.1 A Brief Review of Television Concepts and Nomenclature

Standard television consists of a 525 line scanning format. When facing a monitor, the lines are scanned from left to right horizontally and from top to bottom vertically. Horizontal scanning is at a rate of 15,750 lines per second. At this rate, the entire 525 lines is scanned in 1/30 sec. This is called one frame. Each frame is divided into two interlaced fields each requiring 1/60 second. The interlacing is accomplished by starting the vertical retrace of the scanning beam at an appropriate time (either at the end of horizontal scan or halfway through it). This interlacing then places the lines of one field halfway between those of the others.

The two fields are designated even and odd. On the basis of the above rates, the duration of one line is about 63.5 μsec., one frame 33.3 msec. and one field 16.7 msec. It is important to note that neither the entire 525 lines nor the entirety of any one line is usable for pictorial information. This results from the fact that time is required for retrace of the scanning beams. Thus, between 20 and 30 lines are lost (assume 25) leaving about 500 lines and about 16% of each line is lost (~10 μ sec.) giving a useable line of about 53 μsec. duration.

The scanned area is 4/3 as wide as it is high. This is called the aspect ratio. The bandwidth required for a given resolution can easily be determined. The relationship in the horizontal case is:

$$BW = \frac{R_H N_t}{2K_H T_f}$$

where R_N = number of half cycles per line [$R_H/2$ = # of cycles/line]

N_t = number of lines per frame

K_H = % of line actually used (~84%)

T_f = period of frame (1/30 sec.)

The 1/2 results from the fact that the television industry counts each cycle as two lines resolution, not one. Thus the resolution given by R_H is twice the actual resolution. The above gives R_H = 107 lines per MHz bandwidth.

The vertical resolution is given by:

$$R_V = K_V K_i N_a$$

where N_a = actual number of scanning lines (~500)

K_V = the Kel factor (~.7)

K_i = 1 if a full interlace is used and 0.75 if a random interlace is used.

The Kel factor is a statistical correction which takes into account the fact that it is not possible to transmit any information corresponding to the part of the picture which falls between the scanning lines. They are not "seen" by the camera. Recently, some experimentation was done in which this factor was "effectively" increased by purposely causing the raster to move up and down over a period of frames. [of course for any one frame the factor is still the same.] In this way information missed in one scan can sometimes be detected during the next. R_V is about 350 for standard television. It is interesting to note that for commerical black and white television R_V = 350 and R_H = 350 (the bandwidth

is 3-3.5MHz). For color television the color information bandwidth is 0.5MHz giving a resolution of about 40 lines for the color information.

In a television system the required timing pulses are usually obtained from a crystal oscillator. The basic pulses used to control a television system are derived from this oscillator and are known as horizontal and vertical drive (HD and VD), horizontal and vertical synchronization (HS and VS) and horizontal and vertical blanking (HB and VB). The drive pulses are used to initiate the horizontal and vertical scans in the camera or camera systems. They are the basic timing pulses used in all video processing. The synchronization pulses and blanking pulses are added to the outgoing video. The synchronization pulses are used to synchronize a receiver and the blanking pulses are used to blank out its scanning beam during retrace.

The vertical drive pulse is about 0.7 msec. in duration and the horizontal drive pulse about 6.35 μsec. The sync and blanking pulses are wider. The drive pulses are the basic timing pulses used in the Tricolor Cartograph.

In order to handle color information in a television system, either three separate video signals (red, blue and green) must be processed or the three signals must be encoded and processed as a unit. In the Tricolor Cartograph, three separate channels are used.

4.2 Physical Description

The Tricolor Cartograph is shown in Figure 7. It consists of a display console and a control console. The display console contains the light pen, the control switches and the color display. The control console contains the power supplies, the processor and the memory. The color display is a Model CYM 21 Color Television Monitor manufactured by

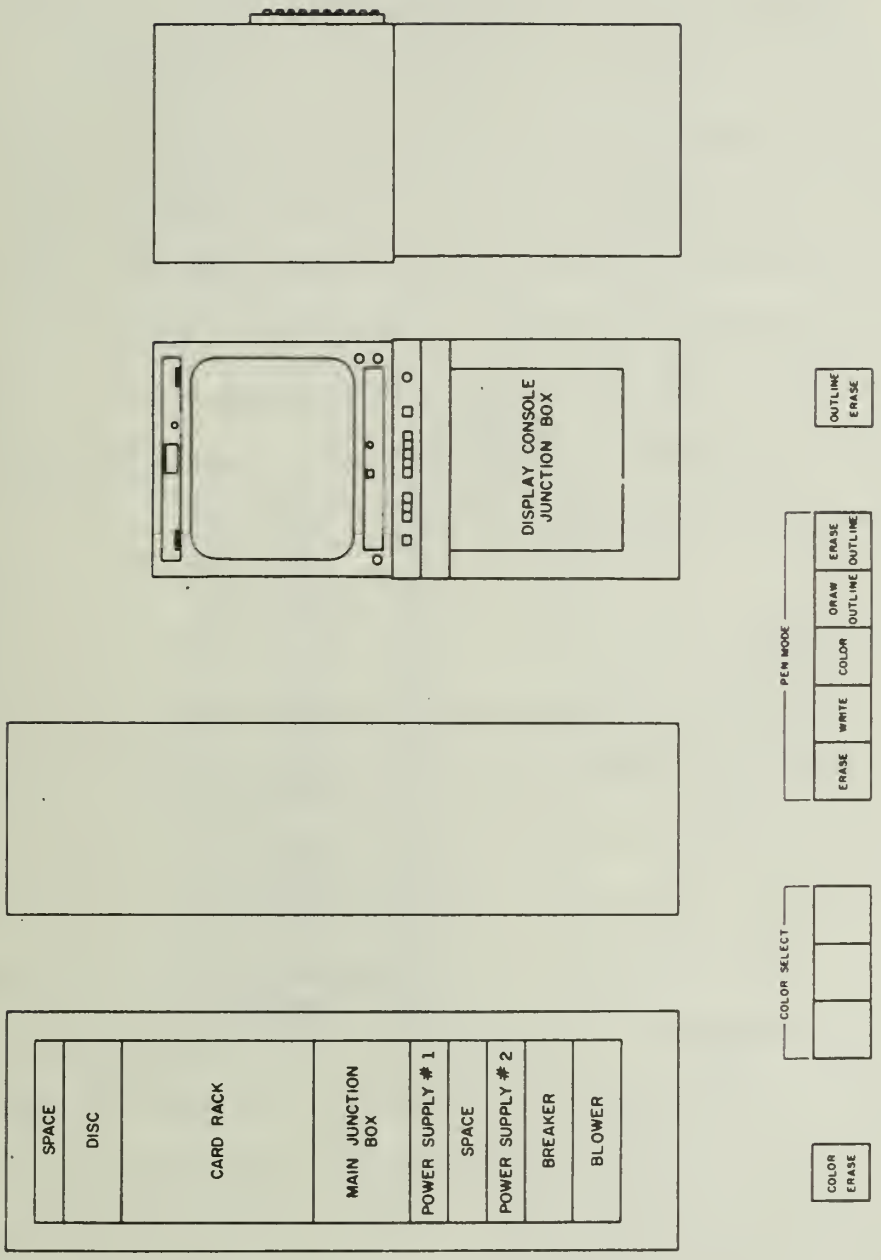

Figure 7. Tricolor Cartograph

Conrac Division of Giannini Controls Corporation of Glendora, California. The memory is a Model 404 Video Memory manufactured by Colorado Video, Inc., Boulder, Colorado. The entire system utilizes a standard 525 line television format, as previously described.

Figure 8 shows a block diagram of the system. Power for the entire system is obtained through the circuit breaker panel. D.C. power is supplied by the two modular power supply units which produced -5, ±10, ±25 volts. The power is distributed by the Main Junction Box. Control signals pass through the Display Junction Box to the Main Junction Box and on to the Control (Processor). Video signals for the monitor eminate from the Control. All signals to and from the video memory originate or terminate at the Control. The Light Pen signal passes through the Display Junction Box and on to the Control.

4.3 The Light Pen

The Light Pen performs two functions. First, it produces a signal designated Enable which performs logical functions in the Control. These functions will be described later. Second, it produces an output pulse in response to light input from the phosphor emission of the Display.

The light produced by the phosphor is detected by a photodiode. The signal thus produced is amplified by a two stage high pass preamplifier in the Light Pen. The signal then passes to a thresholding amplifier. This is a two stage high pass amplifier whose input threshold can be controlled so as to produce some noise immunity. This is necessary because of the extreme sensitivity of the light pen circuitry in conjunction with the fact that the television monitor radiates a prominent signal at 15,750 Hz from its flyback circuitry. There is sufficient coupling of this signal to the pen to cause spurious pulses.

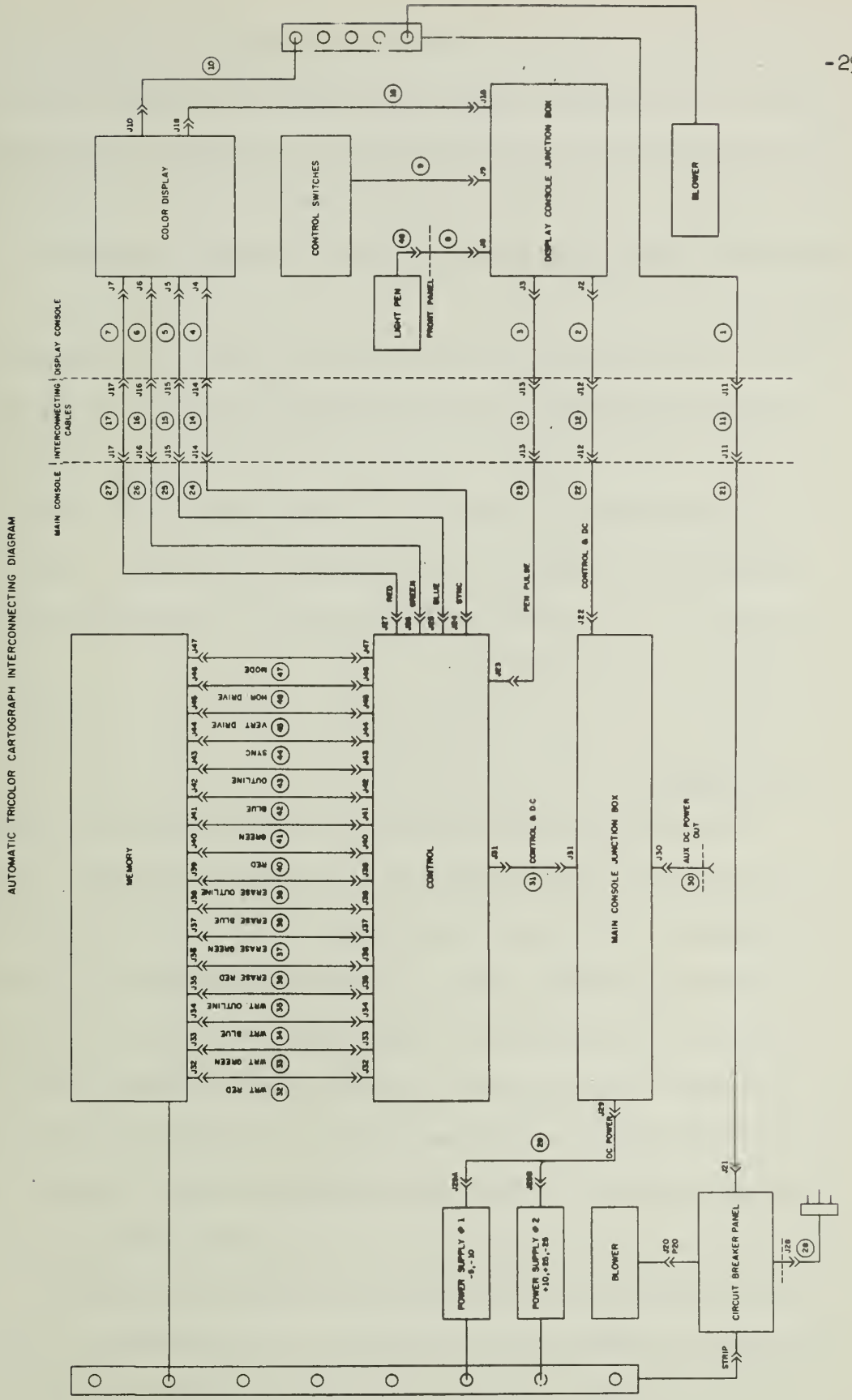

Figure 8. Tricolor Cartograph Block Diagram

Since the pen is activated by the detection of light from the raster, it is necessary to display a raster at all times so that the pen will operate. There is sufficient gain in the system to allow the background level to be quite low. However, this level must be high enough to provide an adequate signal to noise ratio for proper operation of the pen circuits.

After this thresholding and amplification (in the Display Junction Box) the pen pulse passes to a pen pulse shaping circuit at the Processor. Here the pen pulse is shaped into a one volt pulse 120 nsec. in width. This pulse then passes to three 3-input video adders so as to be displayed as a marker on the display. It also passes to the video to logic converter where it is converted to logic levels and subsequently used in all pen operations in the Processor.

4.4 The Display

The Display is a red, blue, green color monitor utilizing a 21 inch tricolor tube. These tubes use three phosphor grouped in triads across the face of the tube. The three phosphors are a red emitting, a green emitting and a blue emitting. The time required for these phosphors to decay to 10% of their initial value is 22 msec. for blue, 60 msec. for green and 1 msec. for red. The relative emitted energy is highest in the red but the red emission is in very narrow spectral bands whereas the green and blue energy is distributed more uniformly. This results in the total integrated energy being largest in the green followed by the blue and the red. This results in a very low sensitivity of the Light Pen to the red phosphor. The pen is most sensitive to green. This is so even though the intrinsic sensitivity of the photo-diode is much higher in the red than in the green or blue.

The triads of phosphor are spaced at intervals of 0.029 inches. With screen dimensions of 16 x 19 1/4 the possible resolution is about 550 dots vertically and 650 dots horizontally. The electrical resolution is 7MHz or 750 lines (i.e. 375 cycles).

One property of the shadow mask tube is that of very low brightness. This results from the fact that the faceplate transmission is only 39% and more important, the shadow mask transmission is only 15%. Because of this, a fairly low room illumination is needed when viewing the Tricolor Cartograph.

Four signals drive the color monitor: red, green and blue video and sync. The sync signal is generated at the disc memory. The three video signals all originate at the Processor.

4.5 The Memory

The Memory utilizes a magnetic disc 12 inches in diameter driven by a hysteresis-synchromous motor at 1800 rpm. There are 5 channels: 4 video and one sync. The sync track is used to generate horizontal and vertical drive, horizontal and vertical sync, and blanking. The four video tracks are used for red video, blue video, green video and outline video. The outline track contains all the boundary information for the figures. Each of these 4 video tracks has two inputs and one output. The inputs are write and erase and the output is read. There is one additional input to the Memory: chop. The chop input controls an internal chopper which can be used when writing.

There are two different methods of writing on the disc: direct and chopped. In direct writing, incoming pulses are written directly on the disc. Pulses of 100 ns width are written in this mode giving about

5MHz response or about 500 line resolution. In the chop mode, the incoming signal is chopped by the internal chopper. Chopping is required when it is desired to write wide pulses onto the disc as is required in the coloring of a large area. This is necessitated by the fact that the read mechanism is by means of detecting a changing megnetic flux on the disc. Thus, if the flux is not continually changing there is no output. In the Tricolor Cartograph the chopper period is about 350 nsec. corresponding to 2.9MHz. This is quite close to limit specified for the disc (100,000 points or 3MHz). At frequencies above this, the output decreases rapidly. A 350 nsec. period yields 154 cycles per line or about 300 line resolution. In addition, the chopper is arranged to produce a dot interlace pattern. This is accomplished by using opposite phases of the chopper during alternate fields. This requires that the chopper start each horizontal line in the same phase during any one field. Although the chopper is quite stable, variations in the drive pulse frequency due to sync track variations make it difficult to maintain the dot interlace pattern over an entire frame. A shift of only 175 nsec. is sufficent to completely reverse the phase of the chopper with respect to an adjacnet line (which occurs 16ms later in time). This is a 0.001% variation. Of course a shift of any multiple of the period results in restoration of the proper phase at that point. The result of this is to produce a "beat" frequency pattern on the screen. In the present system, this non uniformity of the dot pattern is not of great consequence since it is reasonably stable over a period of a few minutes which is all that is required for coloring.

For a system requiring long term stability, both of the above problems can be eliminated by recording a chop track on the disc.

4.6 The Processor

The Processor consists of a three card-rack unit containing all the control logic and video processing circuitry. The logic is performed with Texas Instruments Series 74N transistor-transistor logic elements. The video circuitry is composed of discrete components. The various operations controlled by the Processor are: the total erase mode, the 4 pen modes and the coloring mode. These will be discussed briefly in the following sections. Detailed circuit and logic descriptions will be found in the Appendix. For all modes the color or colors on which a given operation is to be performed is determined by three color selector buttons. One may select red, green, blue or any combination of these. (7 combinations)

4.6.1 The Total Erase Operation

There are two erase operations: Color Erase and Outline Erase. In the Color Erase operation when the Color Erase button is depressed, an erase signal is applied to the disc tracks corresponding to the chosen color(s) for a duration of one frame.

For the Outline Erase operation, the erase signal is applied to the outline track for one frame.

These operations result in the disc surface at the track in question being magnitized in one direction for the entire frame. This causes all previously stored information to be removed.

4.6.2 The Pen Modes

There are five pen modes: Color Erase, Outline Erase, Color Write, Outline Write and Color. The latter is explained in Section 4.6.3.

In the Color Erase mode, the pulse generated by the pen is used to drive the disc erase inputs for the colors chosen. This results

in the erasure of points from the corresponding disc tracks.

In the Outline Erase mode the pen performs a similar operation on the outline track.

In the Color Write mode the pulse generated by the pen is used to drive the disc write inputs for the chosen colors. This results in points being written on the tracks corresponding to those colors.

Similarly, in the Outline Write mode the pen writes points onto the outline track of the disc.

In all of the above modes the pen can be used to do free hand writing and erasing on the color display. The Outline Write mode is used to draw the outline of shapes which are to be colored. In the Processor the video from the outline memory is added equally to all three of the color video signals, red, blue and green. Thus on the display the outline appears white. Before the outline video is added to the red, green and blue video signals, it is delayed in order to compensate for delays which occur in the coloring operation. If this is not done, the colored areas are misregistered slightly from the outline.

4.6.3 The Coloring Process

As mentioned previously, the method used in accomplishing the coloring of closed areas is a compromise between the various conflicting requirements imposed on the system. First, there are no shades of gray in the present system. The introduction of shades of gray into the system allows a much wider choice of colors to be displayed. However, since it is an operator choice, the large number of possibilities would necessitate some sort of preview method which would allow the operator to adjust for the saturation of his choice and then store it. The disc memory used allows only a limited gray scale and would thus limit the usefulness of

this capability. In addition, this feature is just an extension of the present system and does not change it in principle.

Second, the coloring as accomplished in the Tricolor Cartograph results in a misregistration of the color information by two television lines vertically.

The coloring method used is best described in reference to Figures 9 and 10. Initially the pen is pointed to some interior point like X in Figure 9 and the enable button is depressed. When the pen pulse is received by the processor, it begins a search for the bottom point, B, and the top point, T. These points correspond to the points on the outline whose horizontal location is the same as the horizontal pen location. The processor stores the location of the closest points above and below the initial pen location which satisfy the above conditions. In other words, it determines the nearest points of intersection of the outline with a line drawn vertically through the original pen point. Having determined these points the processor uses them as the vertical extremities of the area that will be colored during the current operation. It is now necessary to determine the horizontal extremities. This is done as the lines are being scanned. During any one line, the processor simultaneously performs two operations. First, it determines the last boundary point prior to the pen locations and the first point after the pen location. Second, it colors between similar points which were determined on the previous line. This is shown in Figure 10. Thus, there is a misregistration of two lines. Because the lines are very close together, this does not produce any deterioration in the quality of the picture while at the same time it allows the completion of an entire coloring operation in about two frames (1/15 second).

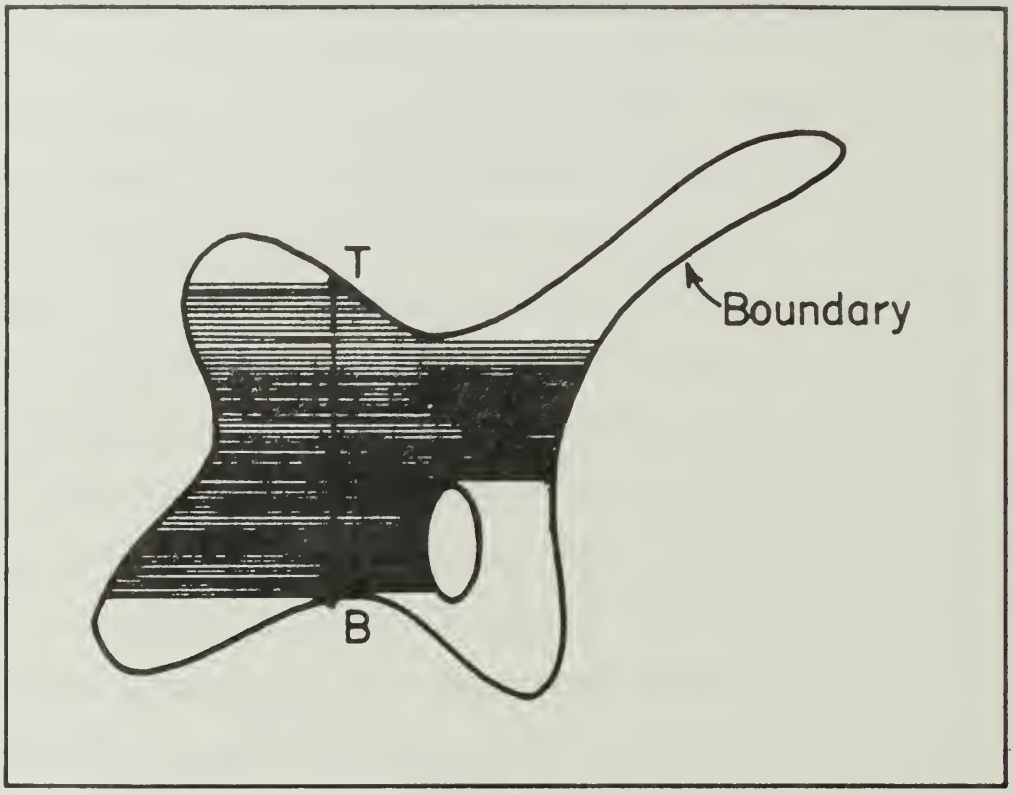

X = Pen Location

T = Top Point

B = Bottom Point

Figure 9. Top and Bottom Point Location

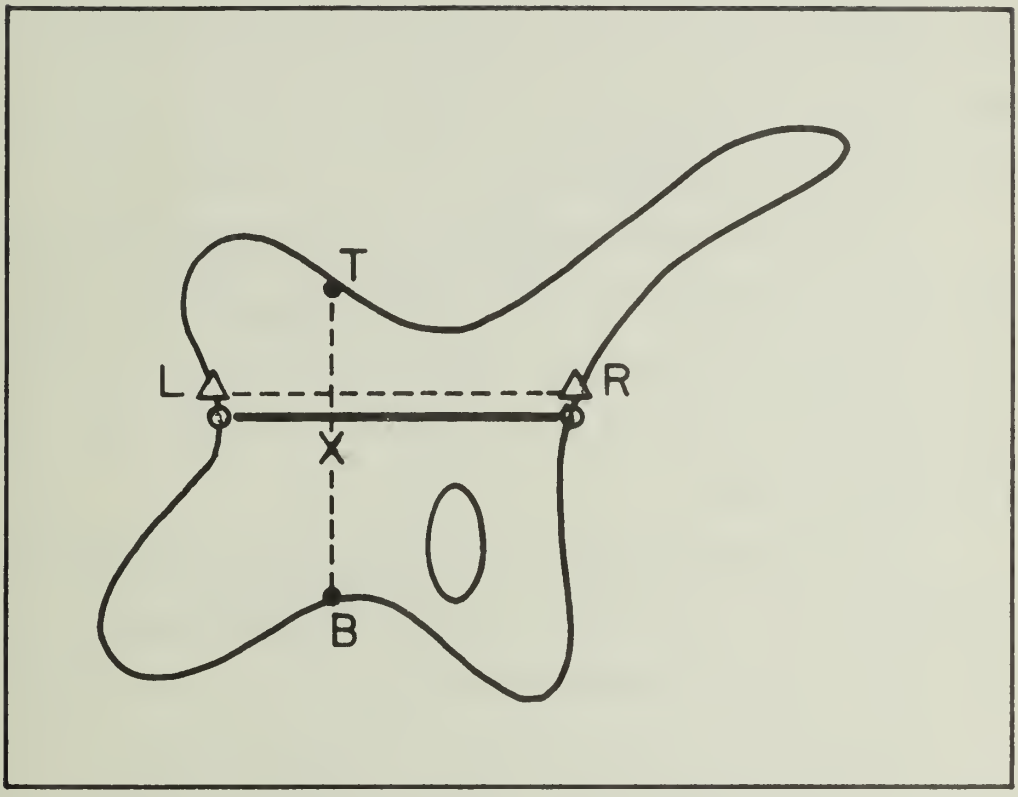

△=Points used to color the line given by o

Figure 10. Left and Right Point Location

Note that for a multiply connected region as shown in Figure 9 and 10, no coloring is done on the side of an interior area away from the pen point. Also, for some figures such as the one shown, it is necessary to move the pen to several locations in order to completely color the entire interior. Thus, to color the figure shown in Figure 9, the pen would have to be moved as shown in Figure 11. For the method used, the worst case is a narrow boundary which is at 45° to the scan.

During the frame in which the coloring is done, the processor starts at the pen location and colors the lower half of the figure during the first field. It then colors all of the figure during the next field. Finally it colors the top of the first field and stops when it reaches the pen position again.

The sequential operations of the processor during the coloring operation are shown in Figure 12. The cycle is initiated by the pen pulse at 1. The pen pulse corresponds to the output of the light sensitive pen and occurs, in time and space, somewhere inside of the closed boundary whose interior is to be colored. With the occurance of this pulse, the horizontal and vertical pen coordinates are stored in the horizontal and vertical pen position registers. At the same time, subsequent pen pulses are locked out for the next seven fields or until a coloring operation is complete at which time a new cycle can be inititated. These operations are indicated at 2 in Figure 12. The counter which counts out the seven fields is shown at 3. This counter terminates the process if no top and bottom point are found within the 7 fields allowed. When both a top and bottom point are found, this counter stops. At 4 the search for the bottom points begins. This is done by finding the first coincidence between the outline and the horizontal pen position which was stored previously. This search is indicated at 5 and occurs when no bottom point has been found. At 6, the vertical drive pulse occurs

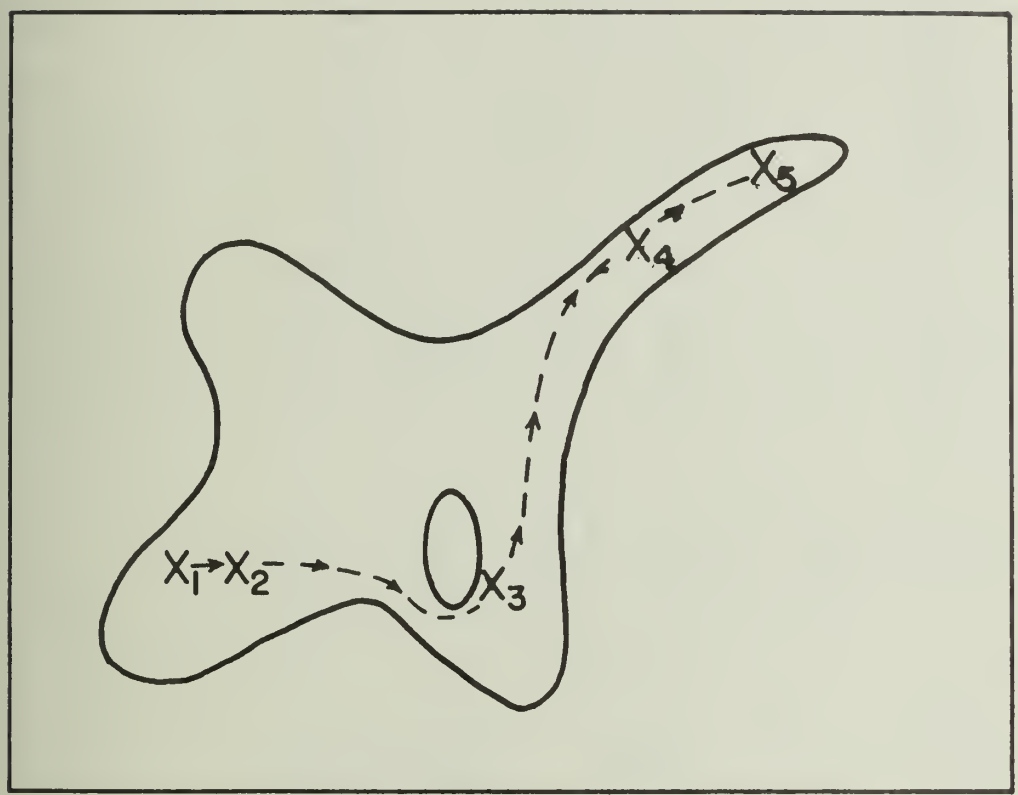

Figure 11. Coloring the Entire Figure

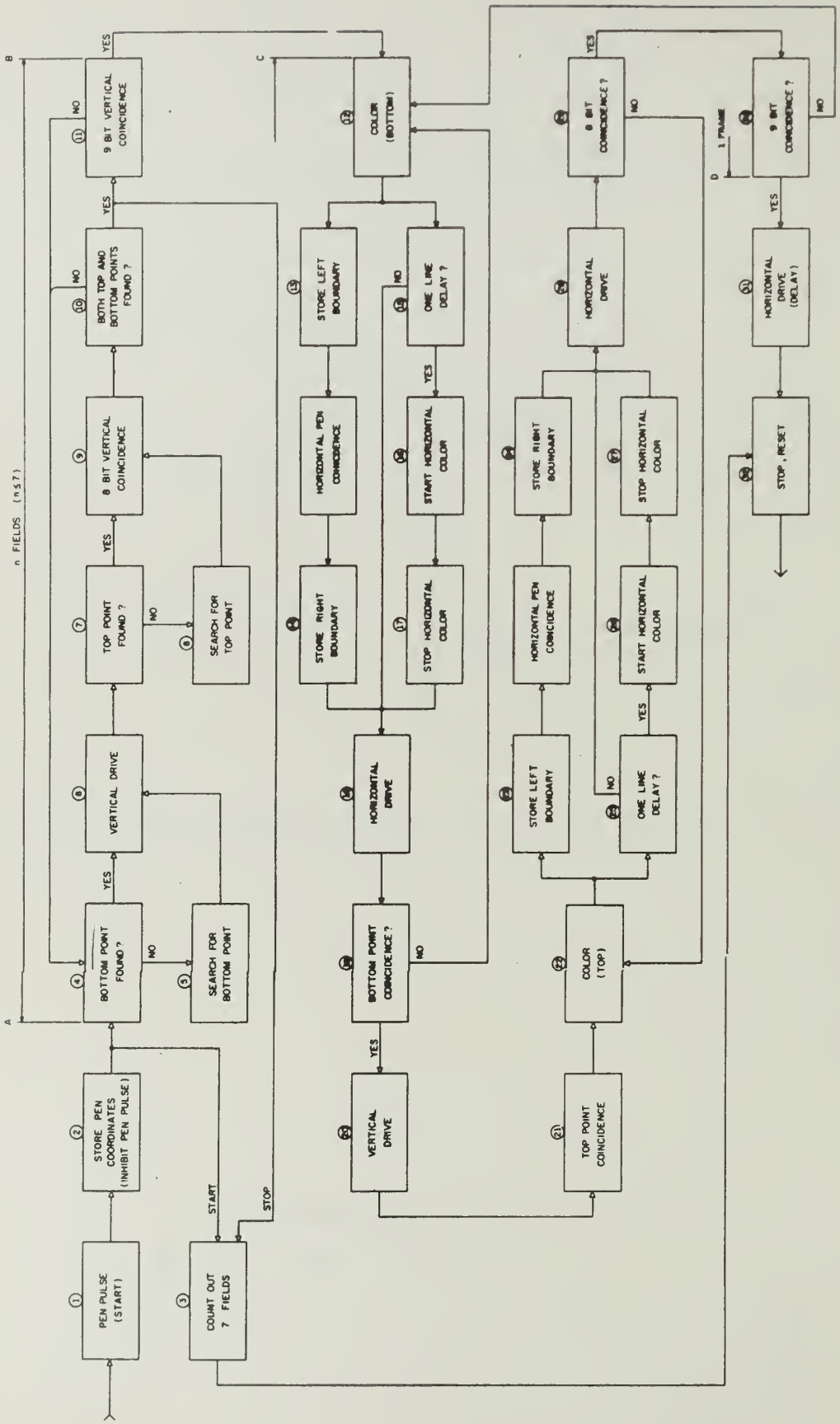

Figure 12. Timing Diagram for Coloring Operation

signifying the end of a field. This signal indicates the beginning of the top point search and the end of the bottom point search. (Again assuming that no top point has been found on a previous search.) The top point search is shown at 8. For the top point, all successive coincidences between the outline and the horizontal pen position are accepted, each one taking precedence of the previous one. This process terminates at 9, 8-bit vertical pen coincidence, with the last top point prior to the vertical pen coincidence being retained. The pen coincidences referred to are obtained from a coincidence circuit which produces an output pulse each time the horizontal and vertical counters contain the same count as that previously stored when the pen pulse occurred. Thus, at 10, assuming that both the top and bottom points have been found, the top point register contains a count corresponding to the TV line on which the outline last had a coincidence with the horizontal pen position prior to the vertical pen coincidence. Similarly, the bottom point register contains a count corresponding to the first line after the vertical pen coincidence on which the outline had a coincidence with the horizontal pen position. If both the top and bottom point have not been found the process repeats starting at 4. Assuming that both a top and a bottom point have been found during seven or fewer fields, the process continues at 11. There are two different vertical pen coincidences used in the system: an 8 bit vertical pen coincidence and a 9 bit vertical pen coincidence. The 8 bit coincidence occurs every field whereas the 9 bit coincidence occurs every frame. At 11 the system waits for a 9 bit vertical coincidence before beginning the coloring. This is done only as a convenient means of reference for performing one frame of coloring. Thus

from point 4 to point 11 a possible n fields has occurred ($n \leq 7$). Note that the system accepts a top and bottom point from either field. At 12 the coloring begins. 13 and 14 represent the operation of finding the left point and right point between which the coloring is to be done. Since there is a one line delay between finding these points and using them, no coloring is done on the first line and the choice at 15 on the first pass is "no." After this, horizontal drive occurs at 18 signifying the end of a line. Should the next line happen to be the line containing the bottom point, the system awaits vertical drive before coloring the top half of the picture. Assuming, however, that the bottom point has not been reached, the loop returns to 12 and proceeds through 15, 16, and 17 using the points previously found at 13 and 14. Of course there is no delay on passes other than the first. The left point and right point are determined in a manner similar to that used in determining the top point and bottom point. For the left point, the system accepts all outline points beginning at the left end of the line and retains the last one when the horizontal pen coincidence occurs. For the right point, the system retains the first outline point occurring after the horizontal pen coincidence. At point 20 then, the bottom of one field has been colored. Just as there is a one line delay in starting the coloring, the coloring stops one line prior to the bottom point. Thus the coloring is actually done inside of the outline. After vertical drive at 20, a process similar to that for the bottom of the figure is carried out for the top of the figure. The major difference is that the test at 29 is for 8 bit vertical coincidence. When an 8 bit vertical coincidence is obtained, a check is performed at 30 for a 9 bit coincidence. On the first field there will be none and the loop returns to 12 where it colors the other field for the bottom of the figure. Then at 19, 20 and 21 the coloring of the other field for the

top of the picture is begun. Finally at 30, a 9 bit vertical coincidence occurs and after waiting for the next horizontal drive pulse (indicating the end of the current line) the process stops and is ready to begin again at 32. The time elapsed from C to D is one frame in length (1/30 second). At this time if the pen Enable switch is still activated and the pen is in the repetitive coloring mode, a new pen positon is accepted and the process begins anew. In the single coloring mode, the Enable switch must be released and reactivated in order to initiate a new coloring cycle.

During vertical retrace, the left and right point registers are set equal to the pen position. This is done so that extraneous coloring will not occur should the system fail to find a left or right point at the top of the figure. Failure to find a point can result from there being no point to find on a particular line or because of the outline geometry at the top of the figure. In Figure 13 A and B, either the right point or the left point is coincident with the horizontal pen position. Under these circumstances, the system may fail to find either the right or left boundary. Since the system always uses the last retained left or right point unless a new one is found, failure to find the boundary at the top means that the left or right point which was used at the bottom will be used at the top. Except in special cases, these points are wrong and frequently can result in coloring outside of the outline. By initializing to the pen position, the coloring is kept within the boundary.

The location of points on the raster of the system are determined by means of a horizontal and a vertical counter. The horizontal counter counts the output of an oscillator which operates at about 8MHz. This oscillator is voltage controlled so that its frequency varies with disc speed changes which occur over time of the order of a frame. Precise tracking is not necessary since stability is not necessary for more than about one line (63.5 μ sec.). The variation in disc speed during this

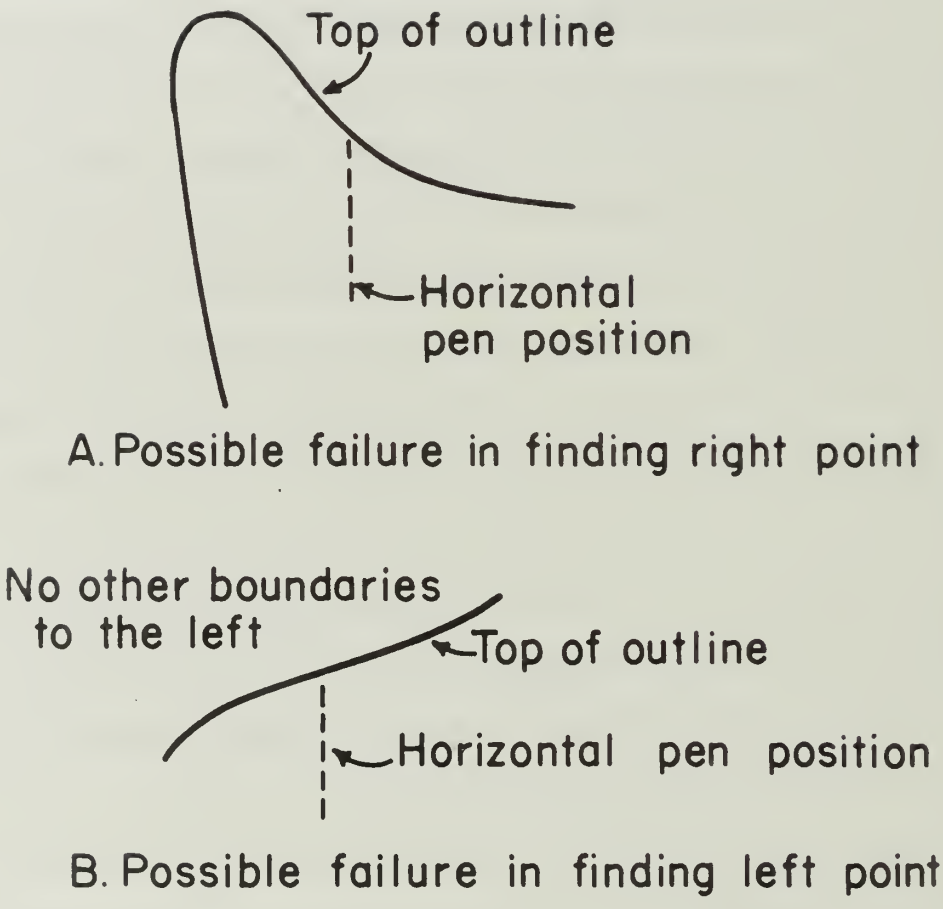

Figure 13. Errors in Finding the Right and Left Points

time is about 70 nsec. maximum. The horizontal counter is reset at the end of each line by the horizontal drive signal. Thus, the count is initialized to zero at the start of each line. This produces a maximum uncertainty between two successive lines of 62 nsec. (1/2 of the clock period) due to the uncertainty of the start of the counter. Considering this with the variation in disc speed gives a maximum variation of 2 counts per line which is less than the resolution of the system.

The vertical counter counts the horizontal drive pulses and is reset by the vertical drive pulse. The least significant bit of the vertical counter is controlled by the horizontal counter in conjunction with the vertical drive pulse. The horizontal counter supplies a signal during the center two quarters of each horizontal line. Depending on whether this signal is present or not when the vertical drive pulse occurs, the least significant bit of the vertical counter is either set to a logical zero or one. Thus the least significant bit determines whether the vertical counter contains an even or odd count corresponding to an even or odd field. The scale of the remainder of the vertical counter which counts horizontal drive is then two.

Coordinates corresponding to positions on the display are stored as counts in the various registers. There are five horizontal registers and three vertical registers. Some of these registers are combined with coincidence circuits such that when the register count corresponds to the counter count an output pulse is generated.

The horizontal registers are the horizontal pen register, the left point register (dual) and the right point register (dual). The horizontal pen register stores the horizontal coordinate of the pen position. The upper level of the left and right point registers store the left and right point coordinates to be used in coloring on the following television line.

The lower level of these registers contains the currently used left and right point coordinates. The information in the upper level is shifted into the lower level during horizontal drive. Both lower left and right point registers as well as the horizontal pen register have a coincidence output.

The vertical registers are the vertical pen register, the top point register and bottom point register. The vertical pen register contains the vertical coordinates of the pen position. The top and bottom point registers contain the vertical coordinates of the top and bottom point. All of these registers have coincidence outputs. Figure 14 shows a simplified diagram of the coloring logic. The complete coloring logic may be found in the Appendix. As can be seen in Figure 14, the actual color signal used to write on the disc is the result of Anding the horizontal and vertical color duration signals.

In the simplified diagram of Figure 14, the horizontal pen register and coincidence does not perform any function. In the actual system it is used in determining the initial starting and final stopping of the coloring. Its primary function, of course, occurs during the search for the top and bottom points. The coincidence is a seven bit coincidence rather than a 9 bit coincidence so as to provide a fairly wide window during the search for the top and bottom point. This increases the probability of finding a coincidence. The coloring circuitry as well as the top and bottom point search control logic is discussed in detail in the Appendix.

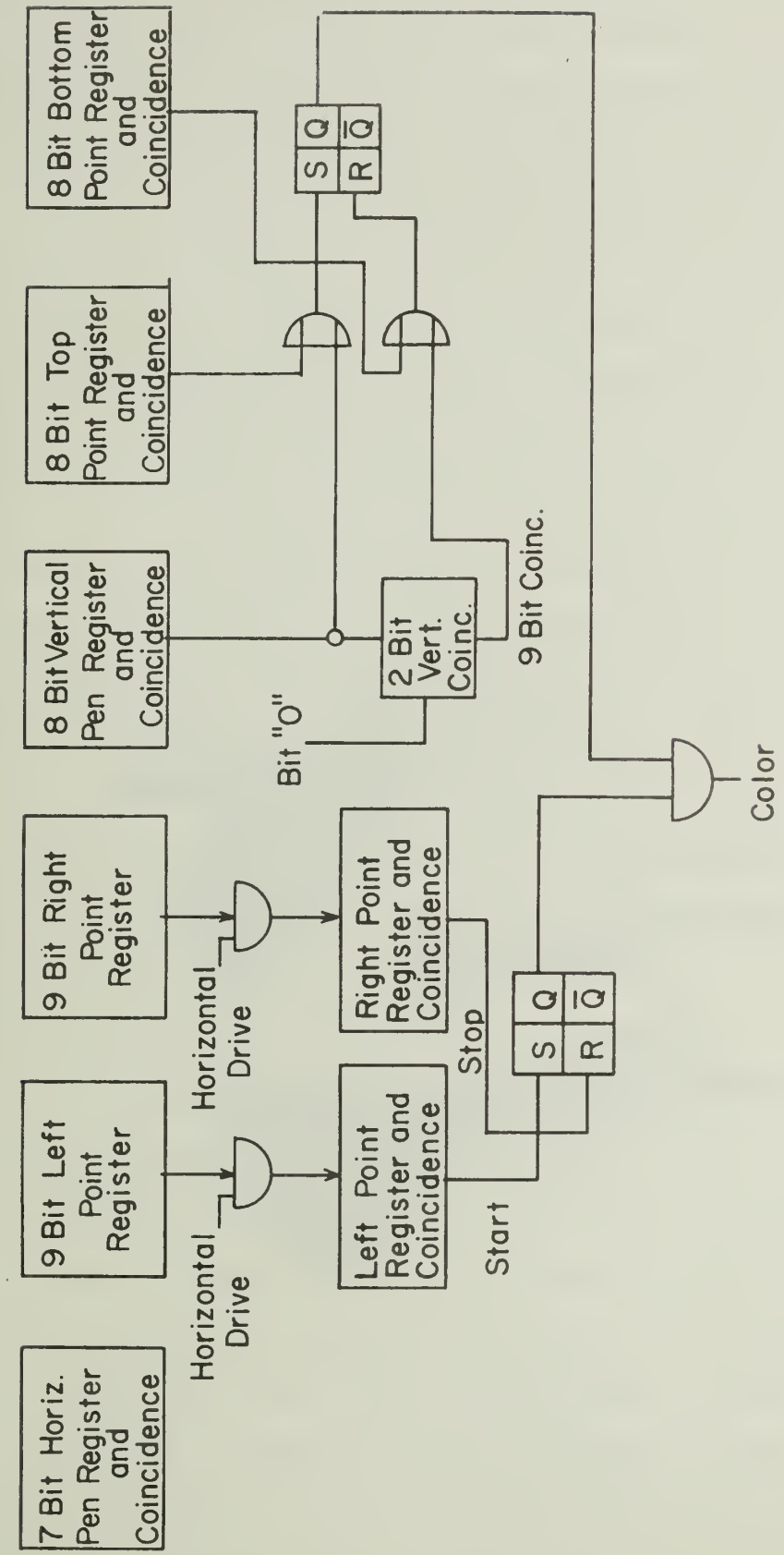

Figure 14. Simplified Diagram of Coloring Logic

5. DISCUSSION OF RESULTS, SUGGESTED IMPROVEMENTS AND CONCLUSIONS

Only one unforseen problem occurred in the final system. This is the so-called "bleeding problem." Recall that one of the rules for the boundary is that it must be closed. In the event that it is not closed (i.e. if there is a hole), the coloring logic will not find a boundary point at that location. This is usually no problem since under these circumstances the system reuses the point which it used previously. Since the boundaries are usually slowing varying and contain only a few holes, no misregistration of the coloring results. If however, there is another boundary present which is not a part of the boundary in question but which does have a point on the particular line being considered, the system will then take this point to be the boundary. This causes the color to "bleed" through the hole in the outline. This is shown in Figure 15. Of course this is precisely what the system is supposed to do, but it is usually not what is desired by the operator.

The problem arises because of the pen writing method used. Since the pen signal is generated by light from the raster, the pen produces a signal at a very low repetition rate (one pulse every 1/60 second). In practice it is easy to move the pen past more than one raster line in this time and thus "skip" some lines. This leaves holes in the outline. These holes cause no problem, of course, if the outline is simple. For multiple outlines however these holes cause faulty coloring. Prevention of holes requires considerable care in drawing the outline. One solution to this problem is to use some other method of generating the pen signal which will yield a higher pen pulse rate. This is not a very useful approach, however, since the disc can be written on only at the 1/60 pulse per second rate. Another solution is to utilize some kind of gap filling scheme. A third is to allow only one outline to be drawn at a time. The best solution is the second one if it could be implemented.

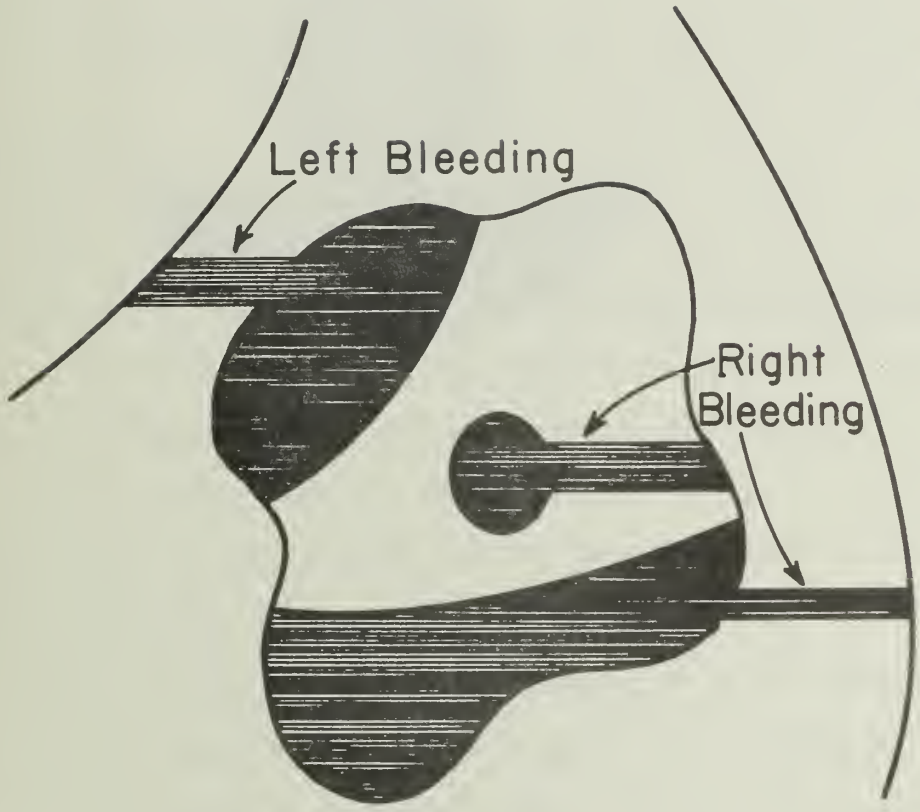

Figure 15. The Bleeding Problem

A related problem which occurred was that of leakage at the top and bottom. This occurred because of the difficulty in drawing a horizontal boundary with the pen. When a horizontal line is written with the pen, if many pulses are written at a high density, the disc becomes magnitized completely in one direction and the output begins to decrease. When this happens gaps appear at the top and bottom of the figure's boundary. If another boundary occurs above or below the gaps, the top and bottom point search may "slip through" the gap and find the wrong top or bottom point. This is shown in Figure 16. This problem can be eliminated by careful use of the pen in the horizontal direction and by widening the top and bottom point search window so that the probability of a point occurring within the window is increased.

As mentioned before, neither of the above problems manifests itself if the outline is accurately drawn or sufficiently simple. To be simple enough requires that there be only two outline points on any one horizontal line. This is frequently not the case, of course.

It is possible to take advantage of the fact that if no new left or right points are found, the old ones are reused in this system. One can easily color any square or retangular figure by simply designating a top point, a bottom point and any left and right points which are required. In other words, it is not necessary to completely close the figure (if it is the only figure). It is only necessary to designate one top and one bottom point which lie on the same vertical in order to define the extent of the figure in the vertical direction. To define the horizontal extent it is sufficient to designate a left or right point only on those lines for which the horizontal width of the coloring is to change. Of course, the first horizontal line must be defined unless one desires the coloring to be only as wide as the initializing circuitry permits. Clearly, this only works for figures which are aligned with the scanning line.

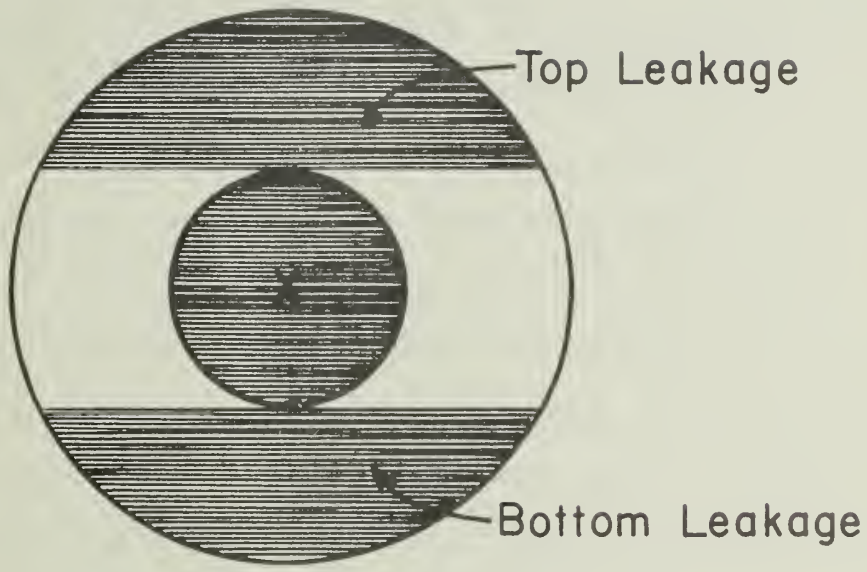

Figure 16. Leakage Through a Gap

There are some changes which could possibly yield improvements in performance in future devices like the Tricolor Cartograph. Stabilizing the disc speed would allow more stable operation of the display and the processor. As mentioned above, perhaps some other type of pen could be used to advantage in order to improve the type of outline which is obtained. Possibly outlines could be input directly from a television camera which is synchronized to the disc. Then line drawings of things to be colored could be made with black ink on white paper and input by this means. In addition, an automatic erase feature could be implemented so that selected areas can be automatically erased just as they are automatically colored now. A higher resolution disc would, of course, yield a higher quality picture and allow the use of a higher chopping frequency. The use of a higher chopping frequency would give a more uniform colored area. If a high frequency chopping signal can be recorded on the disc, the problem of maintaining the dot interlace over the entire frame can be eliminated. This would be accomplished by recording the interlaced chopping signal right on the disc. Then the horizontal and vertical drive signals could be generated from this chop track by using counters or a separate sync track which is synchronized to the chopping track could be used. Finally, the addition of shades of gray would, of course, add more variety to the colors obtainable with the system.

The Tricolor Cartograph proved itself to be a very successful investigation. The coloring method used, although it results in a two line misregistration, results in very adequate colored areas. The misregistration which occurs is not noticable. The concept of using a local storage media which is capable of storing large amounts of pictorial coloring information was demonstrated to be feasible. Assuming further improvements in resolution, the disc appears to be an ideal storage media for

this purpose. Also demonstrated is the concept of performing a reasonably complex operation, the coloring of closed areas, at a display console as opposed to performing a specialized operation such as this with a general purpose digital machine. In addition, the automatic coloring was implemented in a reasonably simple manner. Improvements in the resolution of discs and reductions in the complexity of color display tubes in the next few years will make moderate cost high resolution color display terminals with special purpose processing capabilities a useful reality.

APPENDIX

A1.0 LOGIC DESCRIPTIONS

A1.1 Control and Video Logic

Figure 17 shows the Control and Video logic except for the coloring logic which will be discussed in Section A1.2.

All control signals and power enter on J31. The control signals originate at the push buttons on the front of the display console. These control signals, except the Outline Erase and Color Erase signals, go to the Switch Matrix logic A-1 where they are combined to form the required signals for writing and erasing in the appropriate color. An example would be the erase red signal, R(ER), where ER indicates pen erase or total erase. The Total Erase Control A3 generates a one frame gate pulse for erasing an entire track of the disc. The Total Erase Control circuit is triggered by either C1-1 for the Color Erase operation or C1-4 for the Outline Erase operation. An explanation of the Total Erase Control circuit will be found in Appendix Section 2.1. The outputs of both of these circuits, A1 and A3, provide signals to the logic which drives the Logic to Video Converters A4 and A10. A4 and A10 drive the four erase and four write inputs to the disc. The pen pulse enters the control at J23 and is shaped at A15. It then passes to the video adders A19, 20 and 21 as well as to the video to Logic Converter A17. At the Video Adders A19, 20, and 21, the pen signal is added into the red, green and blue video signals so that it will be displayed on the monitor screen as a white reference dot. At A17 the video pen pulse is converted to a logic pulse so that logic operations may be performed on it. The logical pen pulse ultimately performs two functions: writing or erasing in the memory and initialization of the coloring operation. The enable signal from the pen enters at J31-T and passes through A3 where it is locked out during total erase. From A3 it proceeds to C1-9. This is a delay flip flop which

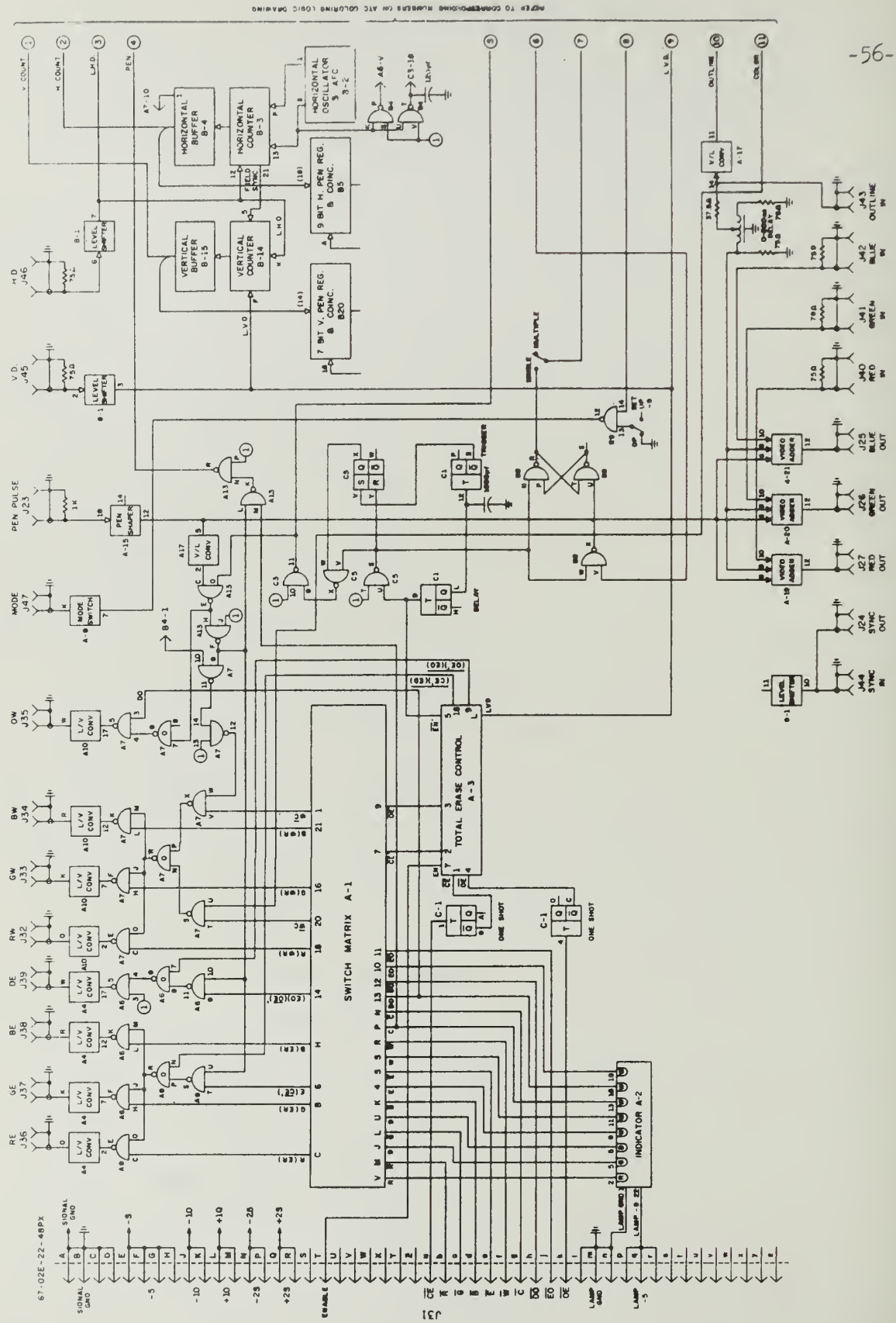

Figure 17. Control and Video Logic

delays the opening of the pen gate until the switch noise from the Enable switch has passed. This is necessary since the pen preamplifier is saturated by the switch noise thus producing spurious pen pulses. After delay, C1-12 is triggered. This sets pen gate flip flop (1) allowing pen pulses through gate A13-C. Flip flop (2) prevents successive coloring operations even though the enable button may be depressed when the single multiple switch is in the single position. Vertical and horizontal drive enter at J45 and J46 respectively and are converted to logic levels by the level shifters B1-2 and 7. Control of the chopper is performed by the mode switch A8-7. The chopper is normally activated when a pen pulse is received in the color mode of operation. It can, however, be activated by placing the Set-Up, Operate switch in the Set-Up position. This allows the chopper to be run for adjustment purposes.

The video signals for the monitor originate at the red, green and blue video adders, A19, 20 and 21. Here the red, green and blue video signals from the disc entering at J40, 41 and 42 are added to the pen pulse from the pen shaping circuit and the outline video signal coming from the disc at J43. This allows equal signals from the pen and the outline memory on each of the three colors and thus they appear white on the display. The outline video entering at J43 passes through a delay line before going to the adders. The undelayed signal passes directly to the Video to Logic converter A17-14 where it is converted to logic levels and used in the coloring logic. The delay is required in order to bring about registration of the outline with the colored interior of the outline. With no delay, the interior lags the outline due to delays in the coloring circuitry.

B2 is the horizontal oscillator, B3 the horizontal counter and B4 the horizontal buffer. Similarly, B14 is the vertical counter and B15 the vertical buffer. The outputs of these two buffers drive the inputs of

all the register and coincidence circuits used in the coloring logic. The least significant bit from the horizontal buffer also goes to gate A7-10 where it chops the pen signal when writing a color. This helps alleviate the problem of overrecording when writing in a color with the pen. This is not done in the outline writing mode because it interferes with the writing of a good outline. See the discussion of pen problems in Section 5.

The Horizontal Oscillator produces an $8MH_z$ clock signal which is counted by the Horizontal Counter. This signal appears at B2-B and enters the counter at B3-13. Horizontal drive enters the counter at B13-12. It is used to reset the counter each horizontal line. The Horizontal Counter produces two signals in addition to the 18 flip flop outputs. The first of these is the AFC pulse. This pulse is fed back to the oscillator to provide some degree of frequency control. The second is the field sync pulse. This signal goes to the Vertical Counter where it controls the state of the least significant bit of that counter. This is done so as to keep the Vertical Counter referenced to the proper field of the television frame. The field sync pulse is the logical exclusive-or of the two most significant bits of the Horizontal Counter. This pulse then exists during the center two-fourths of each television line. If the vertical drive pulse occurs during this field sync pulse, then the next field is even and the least significant bit is set to zero. If the vertical drive pulse occurs other than during the field sync pulse, the least significant bit is set to a one to indicate the beginning of an odd field.

The signal appearing at B2-D is the clock signal of the Horizontal oscillator but it is shifted in phase 180° from the signal driving the counter. This signal is used in the coloring logic in order to accomplish synchronous dumping of the contents of the Horizontal Counter into the horizontal registers.

The Vertical Counter (with the exception of the least significant bit) counts the horizontal drive pulses from the disc. The vertical drive pulse causes this counter to reset at the end of each field.

The 7 bit Vertical Pen Register and Coincidence circuit and the 9 bit Horizontal Pen Register and Coincidence circuit provide output pulses which indicate the last horizontal and vertical position of the pen. This output is not used at present.

The Indicator A2 provides an indication that the control signals generated at the Display Console have been properly received at the Processor.

A1.2 Coloring Logic

The coloring logic is shown in Figure 18. The coloring logic is a mixture of synchronous and asynchronous logic. As described in Section 4.6.3, there are five horizontal and three vertical registers. The horizontal registers are B7 (dual register), B8, B10, and B11. The dual register B7 stores the left and right boundary points as they are found. These are then shifted into the register and coincidence circuits B8 and B10 whose outputs control the Horizontal Color Duration flip flop (8). This flip flop controls the length of the coloring in the horizontal direction. It is set by the output of the Horizontal Left Point Register and Coincidence circuit B8. It is reset by the output of the Horizontal Right Point Register and Coincidence circuit B10. It can also be reset by horizontal drive if for some reason the right point coincidence fails to occur. This prevents the coloring from continuing beyond the end of the current line.

Since a left point cannot occur to the right of a right point, (8) cannot be set once the right point has been passed. This is accomplished at C2-2 by means of flip flop (20). Flip flop (20) is reset by hori-

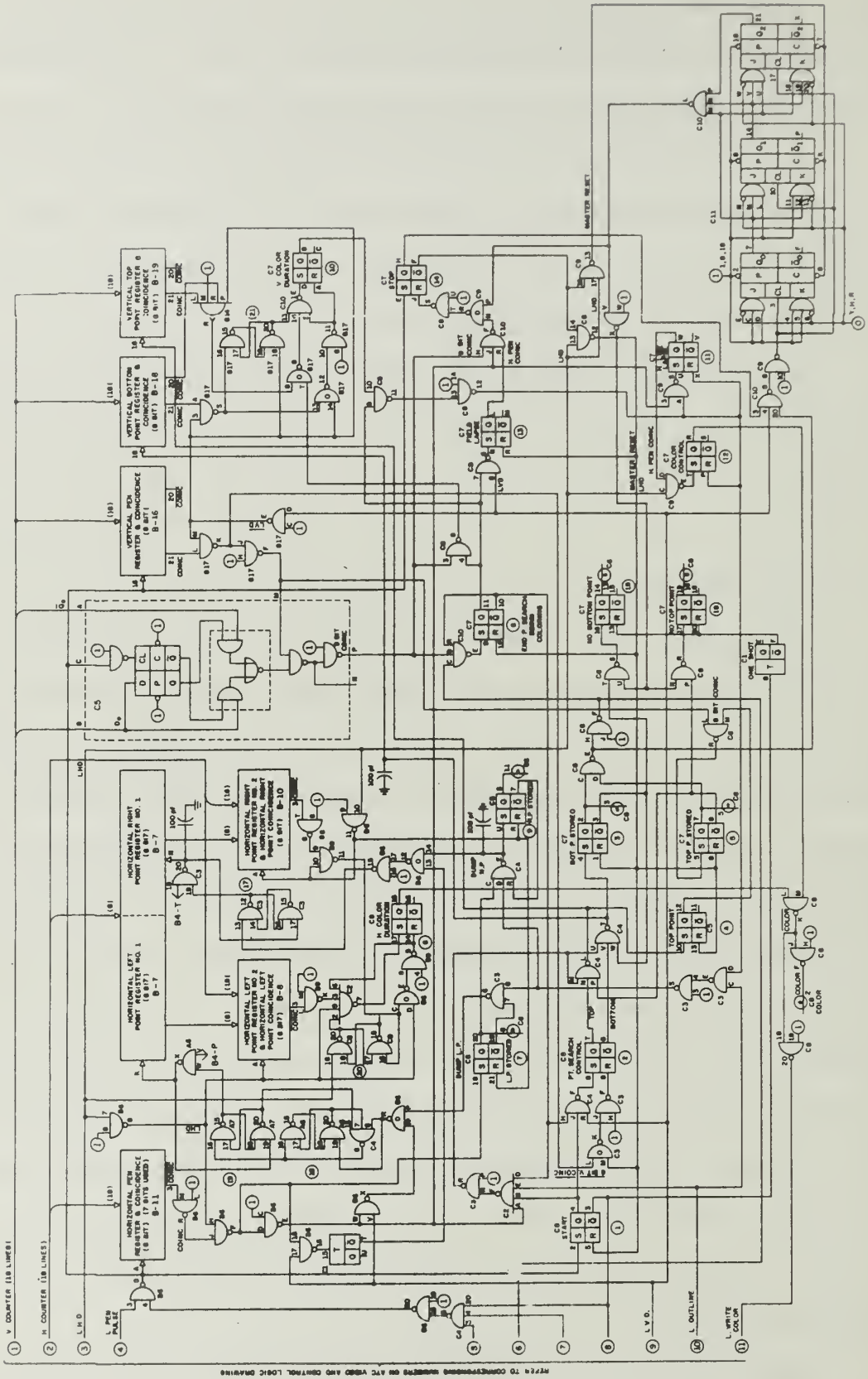

Figure 18. Coloring Logic

zontal drive and set by right point coincidence. In addition to this signal, flip flop (8) also cannot be set during horizontal drive (when the registers are changing) or while it is being reset (as might occur when the left and right points are the same). These two functions are accomplished at C2-5 and C2-6 respectively.

Register B11 is the Horizontal Pen Register and Coincidence circuit. This register stores the horizontal coordinates of the light pen during the coloring operation. In addition, a pulse is generated by it each time the contents of the horizontal counter is identical to the contents of the register. This output pulse fulfills several functions in the system. First, it is used to initialize the Left and Right Point Registers during vertical drive. This is accomplished at B6-X and N and C1-T and B6-13. The pulse sent to the Right Point Register is delayed from that sent to the Left Point Register by using the inverted coincidence signal (B9-16) in conjunction with the One Shot C1-15. By delaying the right point, the left and right points are prevented from assuming the same values. This in turn prevents uncertainty in the state of the Horizontal Color Duration flip flop should the system fail to find a left and right point at the top of the colored area. The second function for which the Horizontal Pen Coincidence is used is in the determination of the top and bottom points. This is done at C4-M, N, P and C4-V, U and W. At these two gates the outline pulses which are coincident with the horizontal pen coincidence are channeled to the appropriate storage flip flop (3) or (4). Which of these flip flops is set is controlled by the Point Search Control flip flop (2). This flip flop controls whether the top point gate or the bottom point gate is open. Once a bottom point is found, the appropriate flip flop, (3) is set and no further search for that point takes place.

This is accomplished by having the flip flop itself close the gate. For the top point, the gate is not closed until a top point is found (signified by (4) being set) and the 8 bit vertical coincidence occurs. In this way, all points are accepted starting from the top of the picture on down until the vertical pen position is reached. The top point search ceases when flip flop (5) is set. The pulses which set the top and bottom point flip flops also dump the vertical counter into the top and bottom point registers B-19 and B-18. If a top or bottom point signal has not been found when the counter C11 times out, the No Bottom Point or No Top Point flip flops (15) and (16) are set and appropriate indicators light showing why the coloring failure occurred. The Point Search Control flip flop (2), as mentioned earlier, controls which point is being sought. This is accomplished by having this flip flop in the set state between vertical drive and vertical pen coincidence (upper part of figure) and having it in the reset state between vertical pen coincidence and vertical drive (lower part of figure). The two outputs control the routing of the coincidence pulses to the appropriate registers and flip flops. This coincidence signal is generated at C2-A, B, E, F, and D. At this gate the logical Nand of the start flip 1, the horizontal pen coincidence, the outline and the not side of the End Point Search/Begin Coloring flip flop is formed. The essential combination is that of the outline and the horizontal pen coincidence. The other signals are present for control purposes.

Flip flops (7) and (9) control the left and right point dump. These flip flops are both reset by horizontal drive. When a line is scanned, the Left Point Stored flip flop remains reset until the horizontal pen coincidence occurs. During this time any outline pulse which occurs causes the Horizontal Counter to be dumped into the Left Point Register B7 by the Left Point Dump flip flops 18 and 19. Once the horizontal pen

coincidence has occurred, (7) is set and outline pulses are allowed to pass to the right point logic. The first pulse after horizontal pen coincidence causes the right point dump flip flop (17) to dump the horizontal counter contents into the Right Point Register B7. At the same time (9) is set and the right point gate is closed. The flip flop (17) stores the fact that a right point has occurred. On the next clock pulse after (17) is set, the counter is dumped into the register. This synchronizing circuit is required to prevent the counter from being dumped while its contents are changing. The left point dumping circuit (18 and 19) is more complicated than the right point dumping circuit. This is because, whereas there is only one right point, there is a whole succession of left points the last of which must be retained. Thus flip flop (18) acknowledges the occurrence of a left point and sets flip flop (19) while at the same time locking out future pulses. (19) remains set until the next clock pulse at which time the left point is dumped and both (18) and (19) reset so that the next pulse can be accepted. Because of the high speed of the horizontal counter it is necessary that the horizontal registers be filled synchronously. This is not the case with the vertical registers and they are filled asynchronously.

As mentioned, there are three vertical registers: the Vertical Pen Register B16, the Vertical Bottom Point Register B18 and the Vertical Top Point Register B19. These are all 8 bit registers with 8 bit coincidence outputs. The Vertical Pen Register stores the vertical coordinate of the pen position and gives a coincidence pulse whenever its contents are identical to the vertical counter. Since the vertical registers are all 8 bit registers, the coincidence pulses produced by them occur every field. A 9 bit coincidence is formed at C5-P by using the coincidence of the least significant bit and the output of the 8 bit coincidence circuit.

The 8 and 9 bit Vertical Pen Coincidence signals are used to perform various control operations in the system. The coincidence outputs of the top and bottom point registers control the Vertical Color Duration flip flop (10). This flip flop is set by vertical 9 bit coincidence or vertical drive or vertical bottom point coincidence. In its normal sequence of operation it is set first by a 9 bit vertical coincidence whereupon the bottom of the figure is colored. Next it is reset by bottom point coincidence. Then it is set again by top point coincidence (the other field) and reset by bottom point coincidence. Finally, it is set by top point coincidence and then the whole process is terminated at 9 bit vertical coincidence again. Flip flop (21) prevents the Color Duration flip flop (10) from being set if the bottom point has already been passed. In addition, the set input is locked out by the reset input and the flip flop is reset by vertical drive. These three precautions are necessary to prevent erroneous coloring if the top and bottom point positions should become interchanged, i.e. the top point is below the bottom point.

Now that the individual functional groups of the coloring logic have been explained, a description of one complete coloring cycle will be given. This will explain the sequential operation of the system and indicate the function of the control logic as yet unmentioned.

The cycle starts with a pen pulse at B6-5. This causes the horizontal and vertical coordinates of the pen to be stored in the horizontal and vertical pen registers B11 and B16. At the same time the Start flip flop (1) is set and the Stop flip flop (14) is reset. Setting the Start flip flop opens gate C2-ABEDF allowing outline pulses which are coincident with the horizontal pen position to pass to the top and bottom point search logic, explained previously. It also locks out future pen

pulses and triggers the one shot C1-6 which resets the No Top Point and No Bottom Point flip flops. The Stop flip flop closes gates C9-13, 14, 12 and C9-15, 16, 17. Thus stopping the flow of reset pulses which have kept flip flops 1, 2, 3, 4, 5, 6, and 12 as well as counter C11 reset. At the same time it allows counter C11 to commence counting vertical drive pulses. Recall that C11 allows 7 fields for finding the top and bottom points. If no top and bottom point are found in 7 fields the entire process is terminated by the signal at C10-L which gates the proper information into the No Top Point and No Bottom Point flip flops at C8-S and R and resets the Stop flip flop at C9-P. If both the top and bottom points are found a signal is generated at C8-E. This signal stops the counter C11 at C10-20 and allows flip flop (6), the End Point Search/Begin Coloring flip flop to set at the next 9 bit vertical coincidence. This flip flop closes gate C2-ACEDF and locks out its own set input. It also opens gates C8-3, 4, 5 and C8-6, 7, 8. The signal at C8-3, 4, 5 causes the Vertical Color duration flip flop (10) to set for the coloring of the lower half of the figure as explained previously. The signal at C8-7 allows the next vertical drive pulse to set flip flop (13), the Field Lapse flip flop. This flip flop simply senses the fact that one field has elapsed since the flip flop (6) was set. In other words it inhibits pulses at C10-F until both fields of the frame have been colored. The vertical color duration logic operates as explained previously. The Vertical Color Duration flip flop (10) opens gate C8-9, 10, 11. This allows flip flop (11), Horizontal Line Lapse to be set when the next horizontal pen coincidence pulse occurs. It also opens gate C3-CDE allowing outline pulses to pass to the horizontal color duration circuitry. It also has the effect of removing the reset signal from flip flops (11) and (12). Once (11) has been set, (12) will be set by the next horizontal drive pulse. Thus, the effect of (11) and (12) is to introduce a one line delay before the actual

coloring begins. This accomplishes two things: First, it allows the horizontal color duration logic to find some left and right points and second, it causes the coloring to fall within the outline. Thus, the actual coloring signal is formed at C9-K and consists of the logical Nand of the Color Control flip flop (12) (which is just flip flop (10) delayed from starting by one line) and the horizontal color duration signal from flip flop (8) as already explained. The cycle now continues under the control of the Vertical Color Duration flip flop (10) until the next 9 bit vertical coincidence pulse occurs (one frame). This signal appears at C10-H. After this signal is generated, at the next horizontal pen coincidence the Stop flip flop (14) is set. The cycle continues until the next horizontal drive pulse at which time all the flip flops 1, 2, 3, 4, 5, 6, 11, 12 and 13 are reset. Note that (11) and (12) are reset by virtue of (6) being reset. During coloring, the color signal generated at C9-K passes to A7-U, A7-N and is then routed through one or more of the color selection gates A7-E, F, K and on to Logic to Video Converter A10. This completes the description of the coloring logic.

A2.0 CIRCUIT DESCRIPTIONS

In this section a brief circuit description will be given for each printed circuit board and major chassis.

A2.1 Circuit Boards

The circuit boards are discussed in order by number. The schematics of these circuits are given at the end of this section. All digital integrated circuits are Texas Instruments Series 74N.

1469-121 Pen Preamplifier

This is a two stage high pass, high gain amplifier used in the pen to amplify the output of the light sensitive diode. The Enable switch is also located on this circuit board.

1469-133 Counter Buffer

This circuit has 2-input nand integrated circuits connected as inverters. It is used to buffer the output of the horizontal and vertical counters.

1469-134 Horizontal Counter

A 9-bit synchronous counter utilizing J-K flip flops.

1469-135 Dual 9-Bit Register

A dual 9-bit clocked register utilizing D-type flip flops.

1469-136 8-Bit Register and Coincidence

An 8-bit clocked register utilizing D-type flip flops whose outputs are connected to a digital comparator circuit which utilizes And-Or-Invert type logic circuits.

1469-137 R-S Flip Flop

Several nands connected to form R-S flip flops.

1469-138 Vertical Counter

A 9-bit synchronous counter utilizing J-K type flip flops.

1469-139 9-bit Register and Coincidence

The same as the 8 bit circuit except with an added bit.

1469-140 Switch Matrix

A decoder for the control switches which generates the logical combinations of the control switch signals required by the processor.

1469-141 2-bit Coincidence and R-S Flip-Flop

Several nand connected as R-S flip flops as well as a D-type flip flop and And-Or-Invert circuit connected as a 1 bit register and comparator. Used to form a 9-bit coincidence from an 8-bit coincidence and a 1 bit input.

1469-145 Total Erase Control

Logic to generate a one frame erase signal as well as perform certain lockout functions.

1469-156 Level Shifter

Shifts the video drive signals (about-4 volts) to logic levels (-5 volts).

1469-159 One Shot Buffer

A group of nands connected as monostable multivibrators. Both a complemented and an uncomplemented signal are available.

1469-161 General 2-Input Nand

Three 2-input nand packages with all pins brought out.

1469-162 General 3-Input Nand

Three 3-input nand packages with all pins brought out.

1469-173 Switch Filters

A group of RC low pass filters for the control switches.

1469-175 Logic to Video Converter

A very fast direct coupled switch which converts the -5 volt to 0 volt logic levels to a 9 to +1 volt video level.

1469-176 Indicator

An array of 9 light bulbs with drivers such that a zero volt signal lights the bulb and a -5 volt signal extinguishes it.

1469-177A Video to Logic Converter

A very fast, very high gain direct coupled level shifter with adjustable input threshold which will convert a 0 to +0.3 volt video signal to a 0 to -5 volt logic signal.

1469-178 +1 Volt Supply/Mode Switch

Supplies +1 volt and provides a switch which converts the logic level input to the level required by the chopper control input on the disc.

1469-179 Pen Shaper and Gate

Converts the pen pulse into a very fast +1 volt pulse about 100 nsec wide. Also provides a logic gate output which begins with the pen pulse and lasts for several hundred μ seconds.

1469-180 3-Input Video Adder

This circuit combines three separate video input signals into one. Separate gain adjustment is provided for each signal as well as overall gain. It is direct coupled and wide band.

1469-181-20 General 4-Input Nand

Three 4-input nand packages with all pins brought out.

1469-181-70 General J-K Flip Flop

Three J-K Flip Flop packages with all pins brought out.

1469-184 Voltage Controlled Oscillator

A Colpitts oscillator with a varactor diode in the tank circuit. A pulse width to voltage converter produces a control voltage dependent on the incoming pulse width. The maximum shift is about 15 kHz /μsec and is adjustable by means of the gain adjustment.

A2.2 Chassis

The following is a brief description of each of the major chassis. Following the descriptions the schematics are shown.

A2.2.1 Main Junction Box

The Main Junction Box serves as a control and power distribution center for the Main Console.

A2.2.2 Display Junction Box

The Display Junction Box serves as a control and power distribution center for the Display Console. In addition the pen thresholding and amplifying circuit is located in it.

A2.2.3 Miscellaneous

The other major major chassis are the Circuit Breaker Panel, the Modular Power Supplies and the Switch Panel. The Circuit Breaker Panel serves as an AC distribution point. The Modular Power Supplies provide -5, ±10, and ±25 volt DC sources for all of the circuitry. The Switch panel contains the Control Switches which are used to select the operating modes of the system.

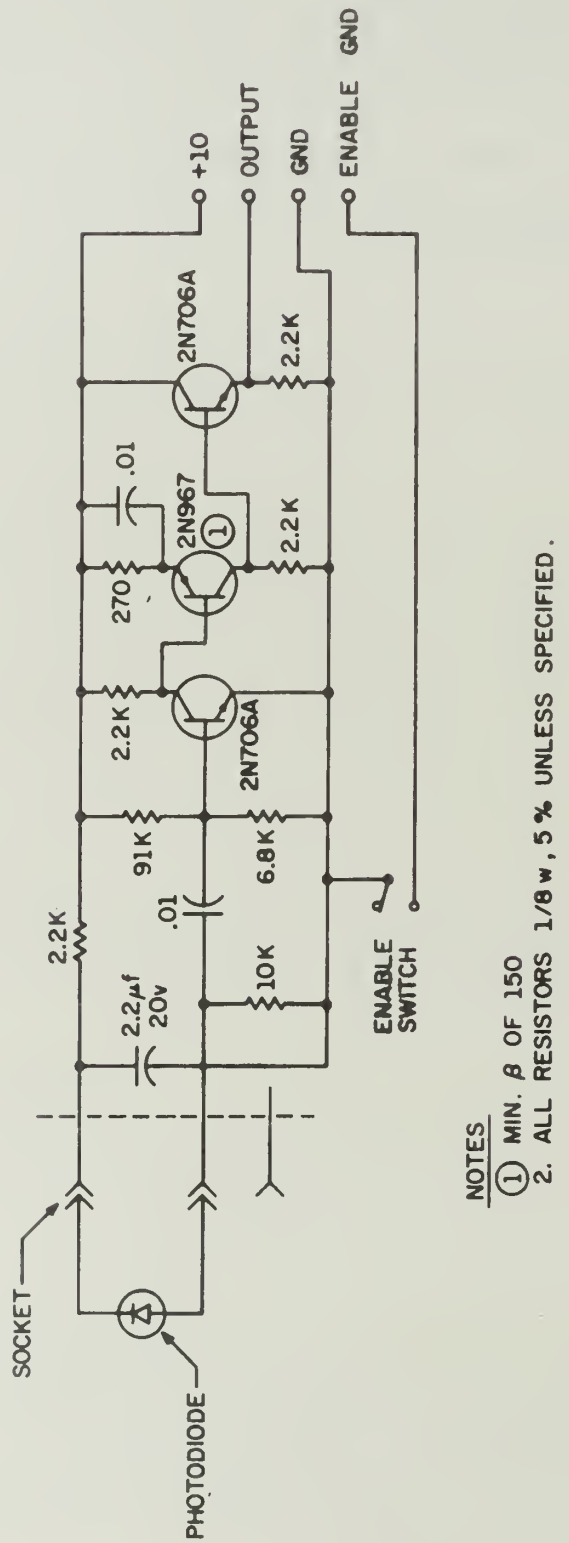

Figure 19. Pen Preamplifier 1469-121

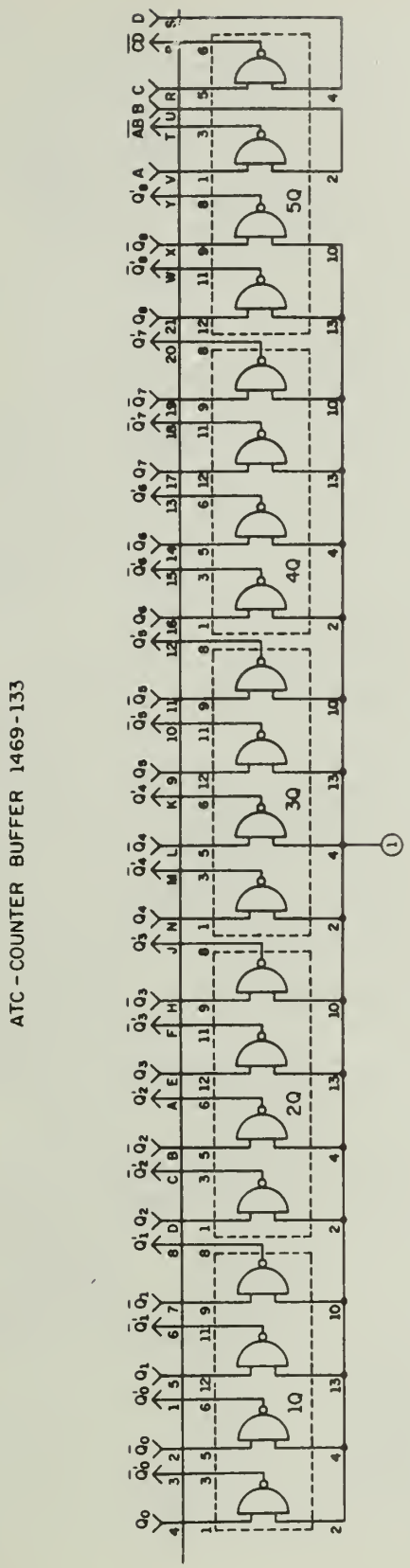

Figure 20. Counter Buffer 1469-133

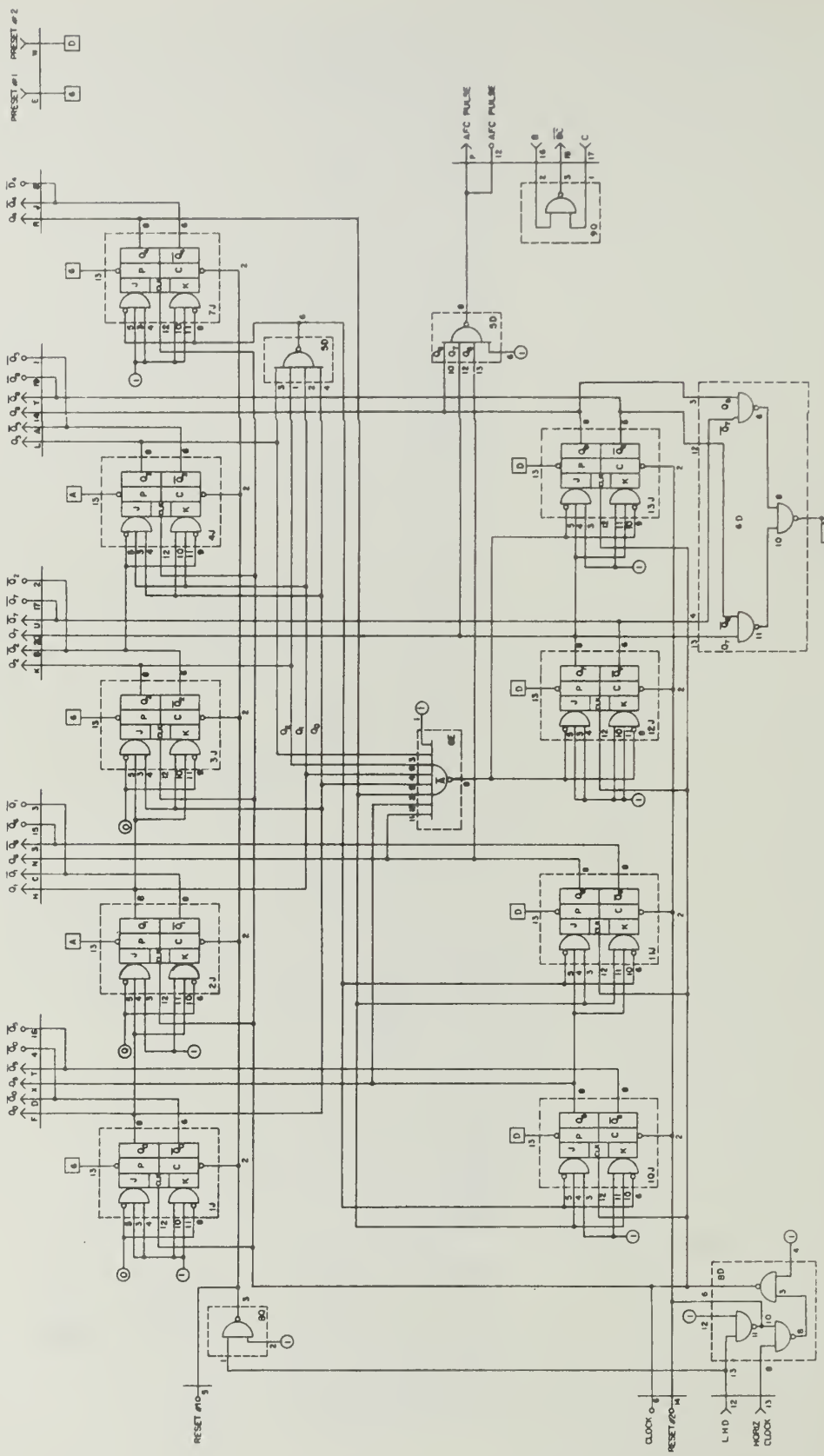

Figure 21. Horizontal Counter 1469-134

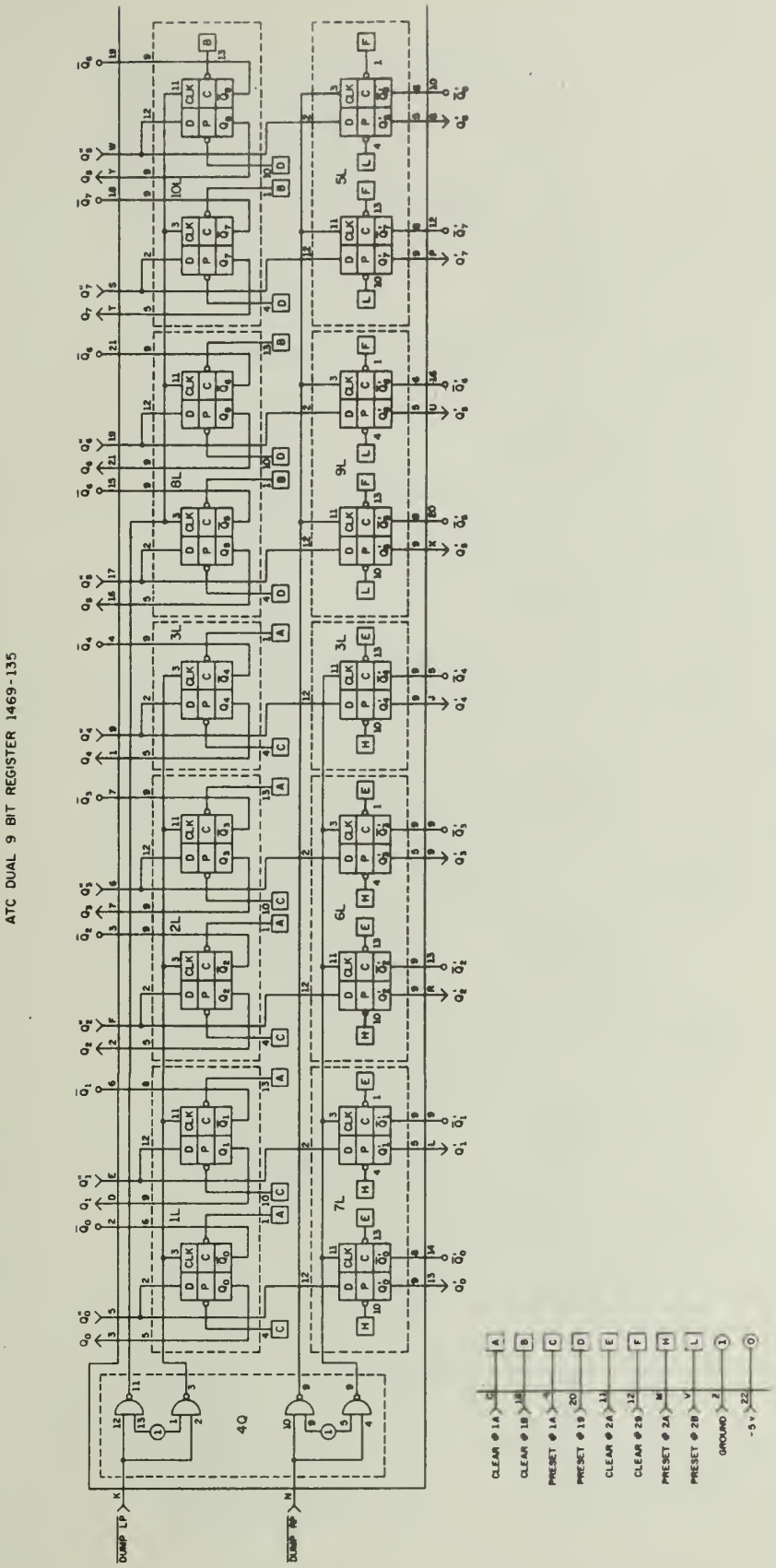

Figure 22. Dual 9-Bit Register 1469-135

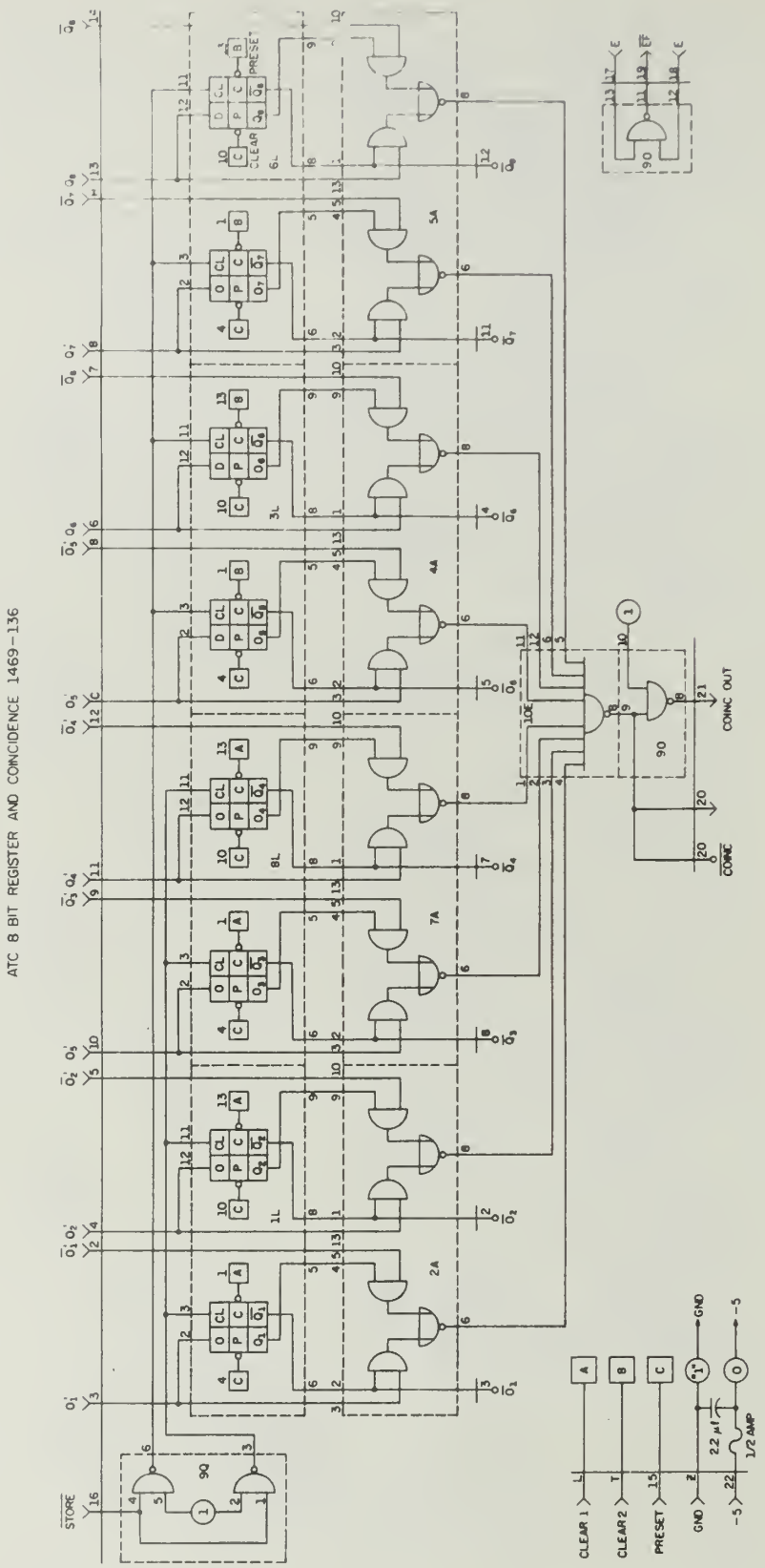

Figure 23. 8-Bit Register and Coincidence 1469-136

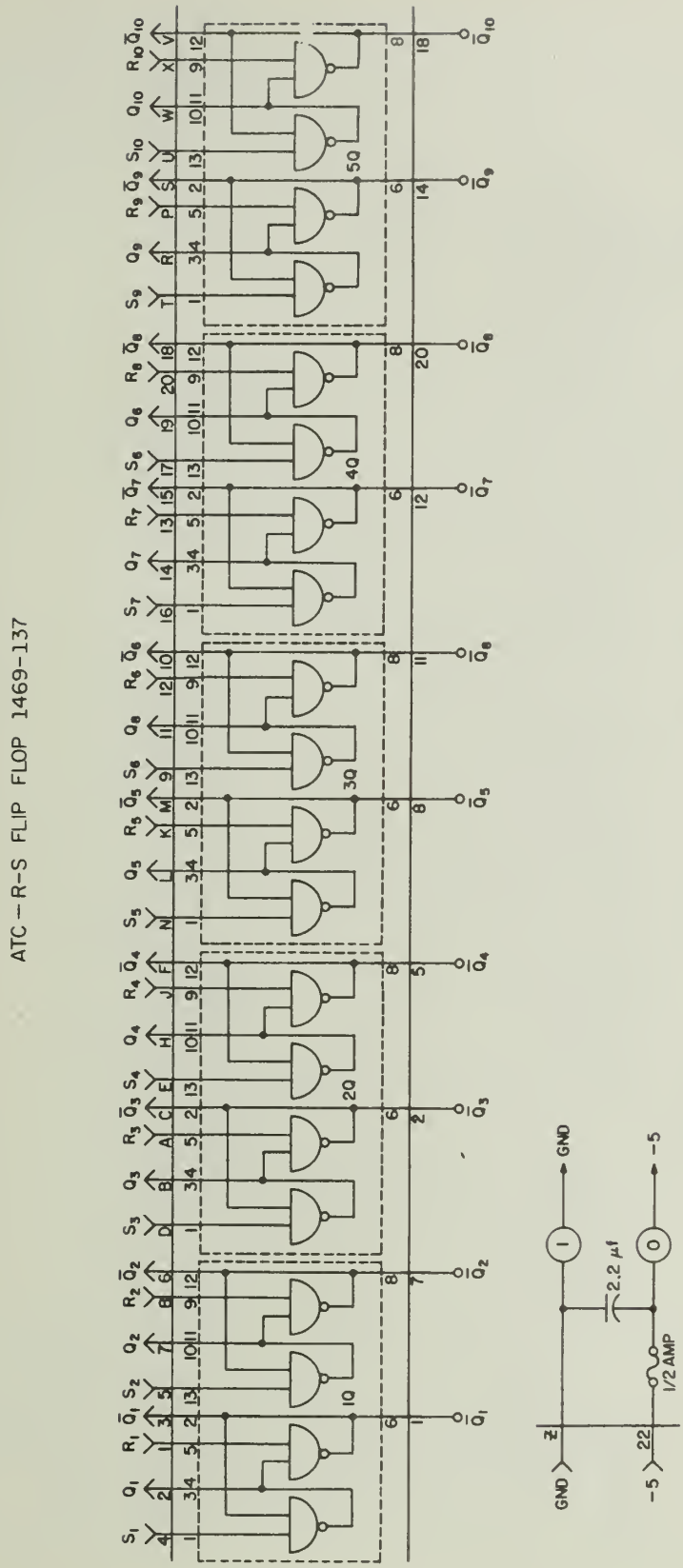

Figure 24. R-S Flip Flop 1469-137

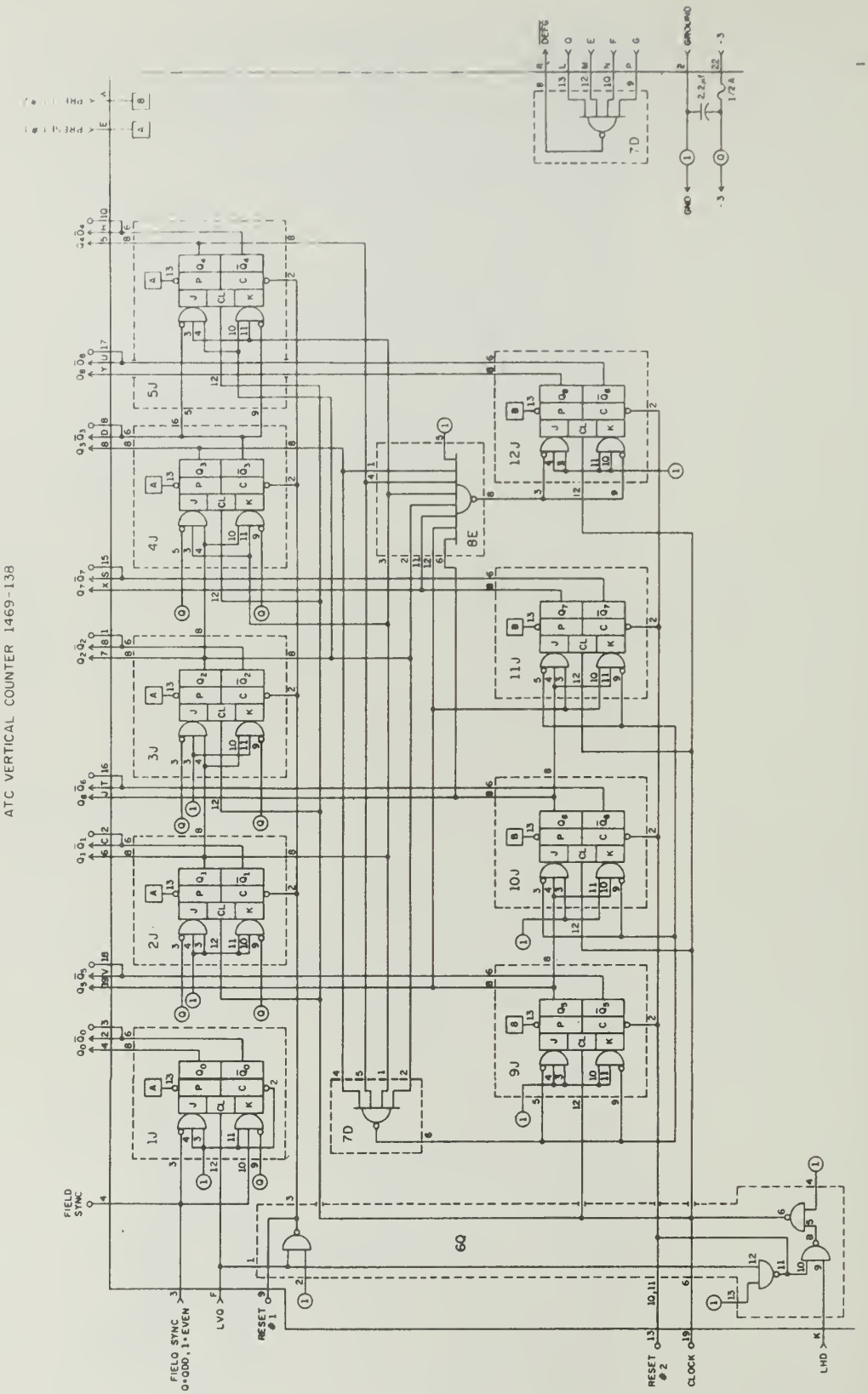

Figure 25. Vertical Counter 1469-138

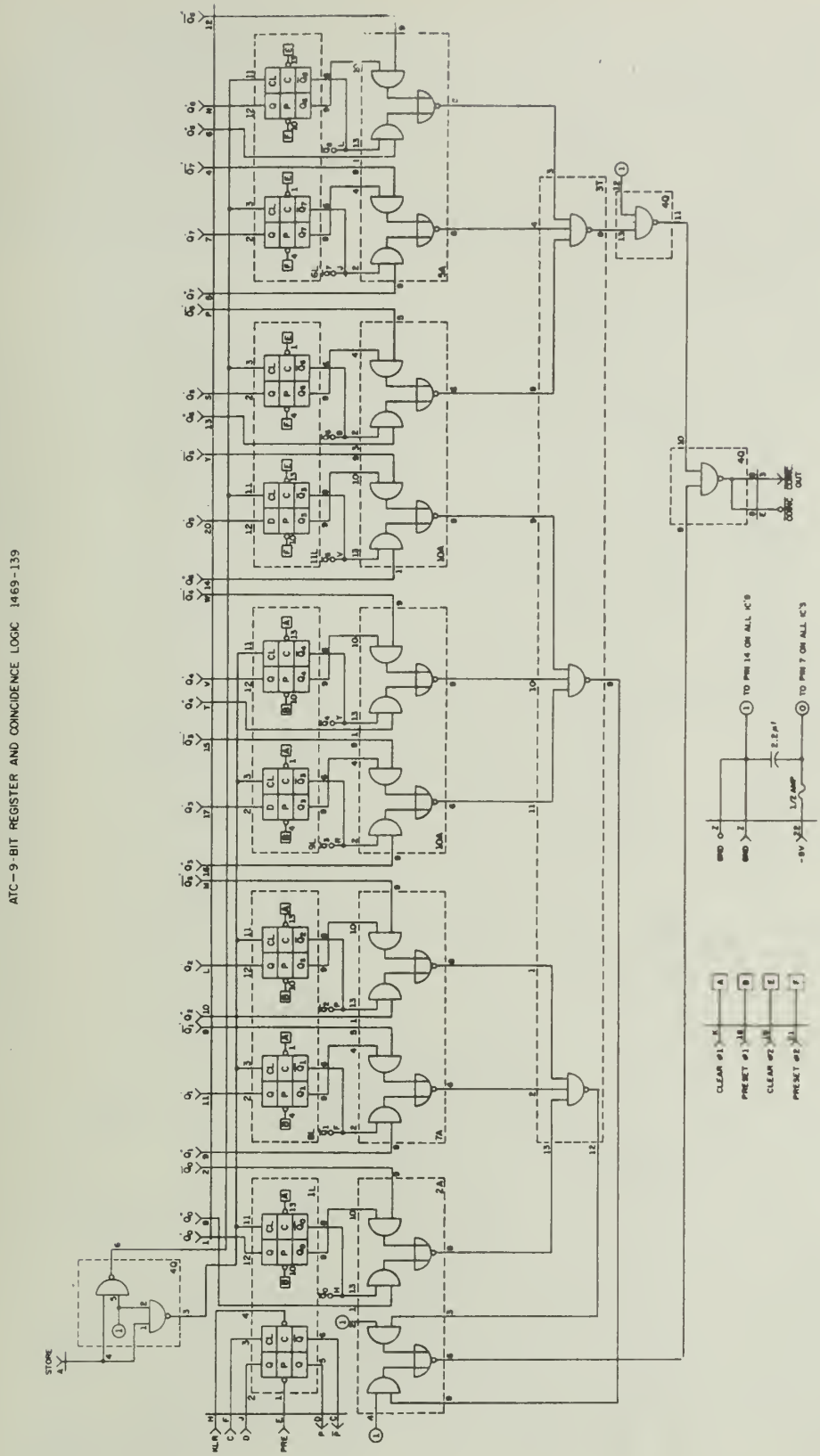

Figure 26. 9-Bit Register and Coincidence 1469-139

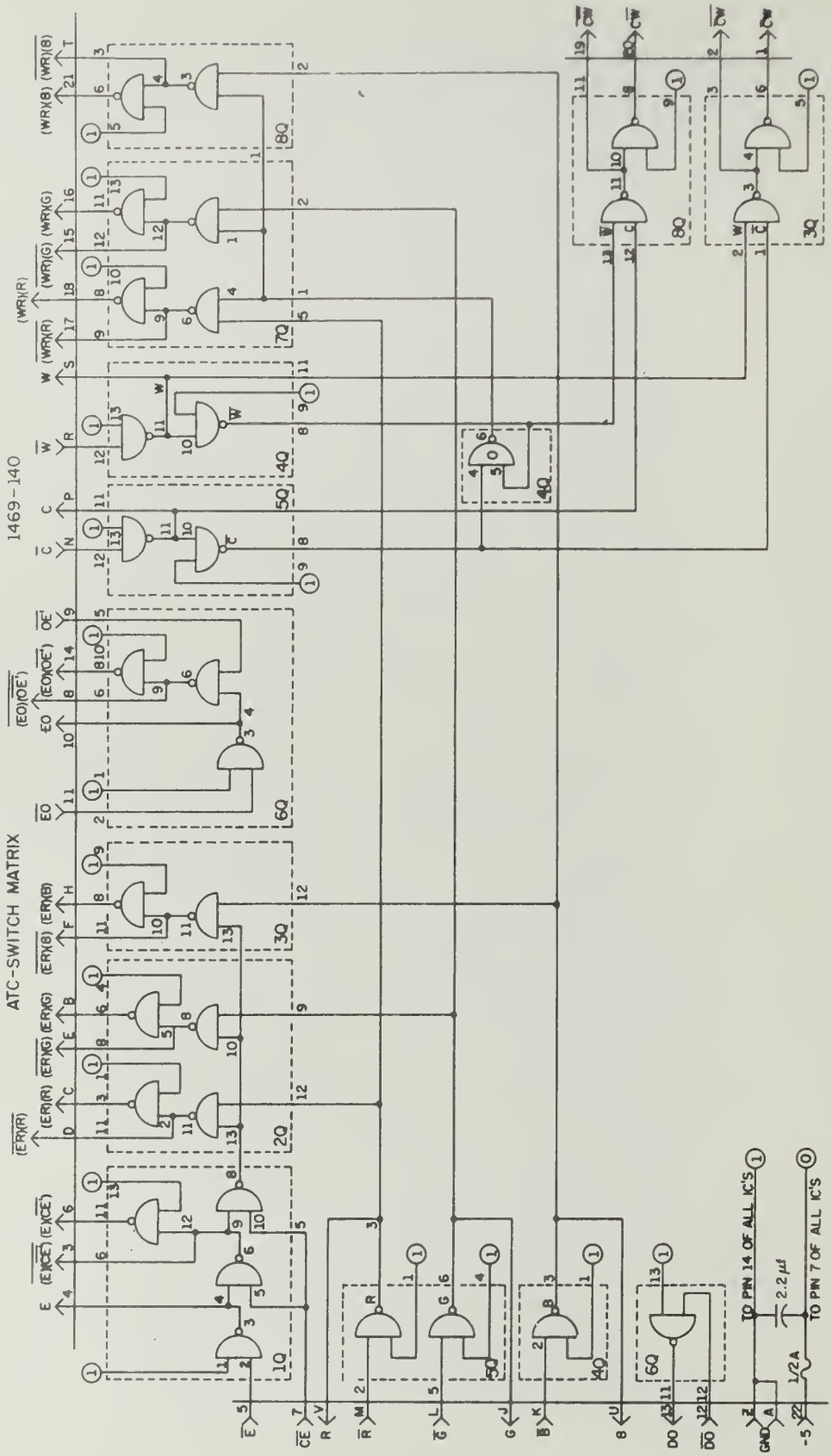

Figure 27. Switch Matrix 1469-140

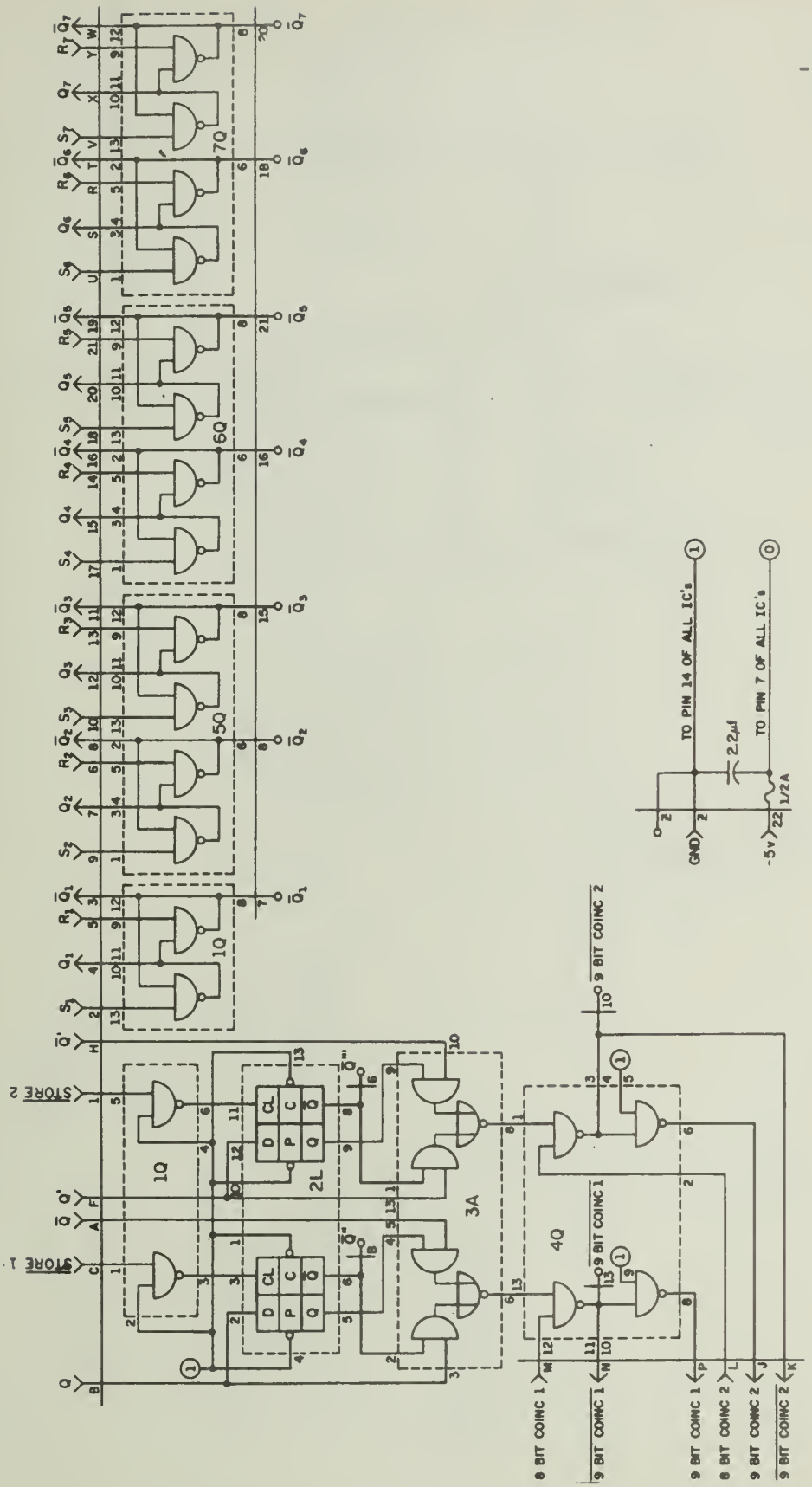

Figure 28. 2-Bit Coincidence and R-S Flip Flop 1469-141

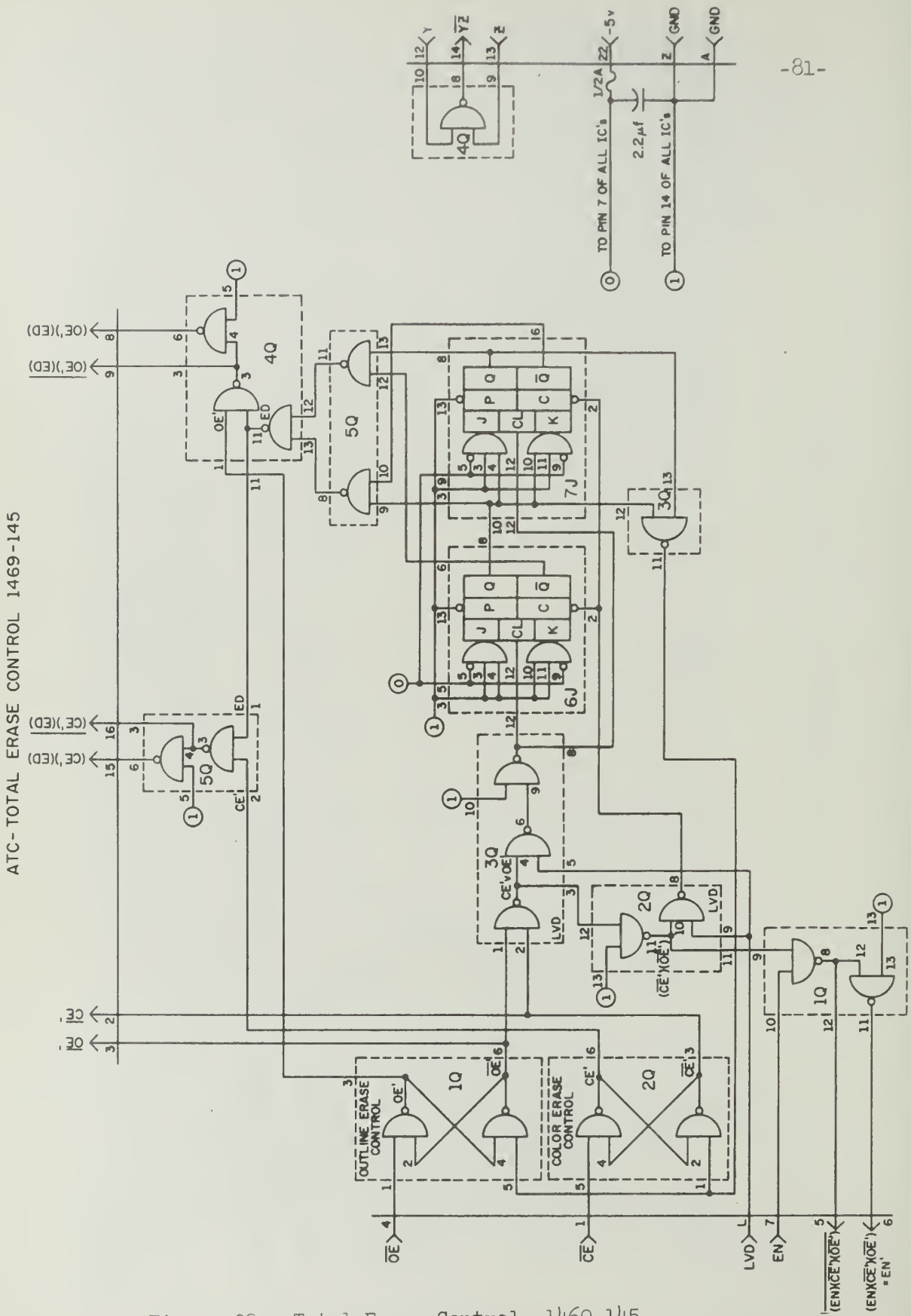

Figure 29. Total Erase Control 1469-145

A.T.C. LEVEL SHIFTER 1469-156

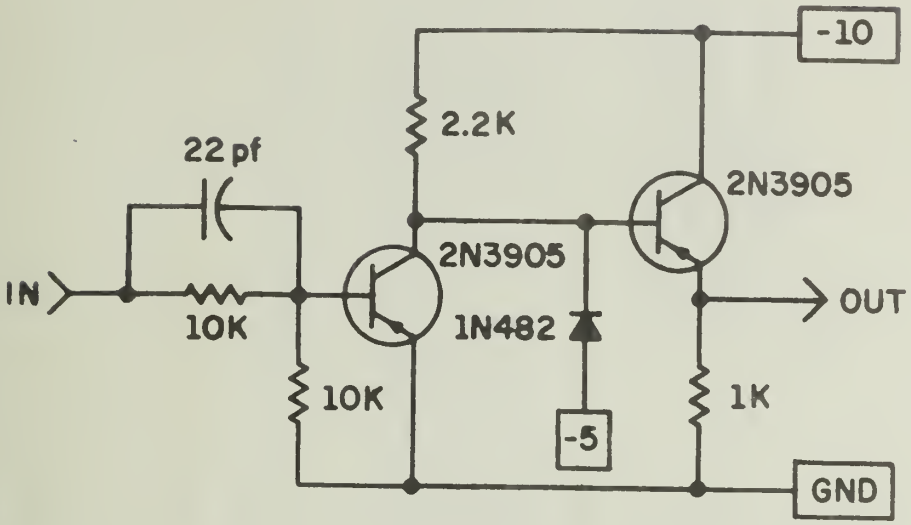

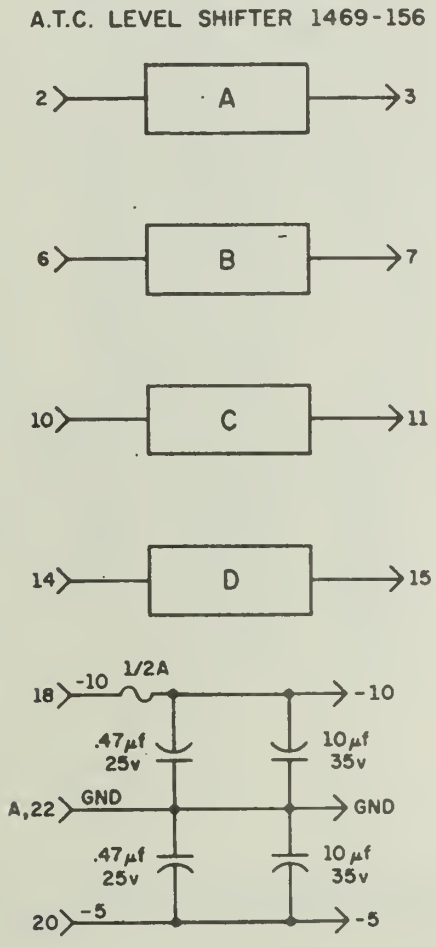

Figure 30. Level Shifter 1469-156

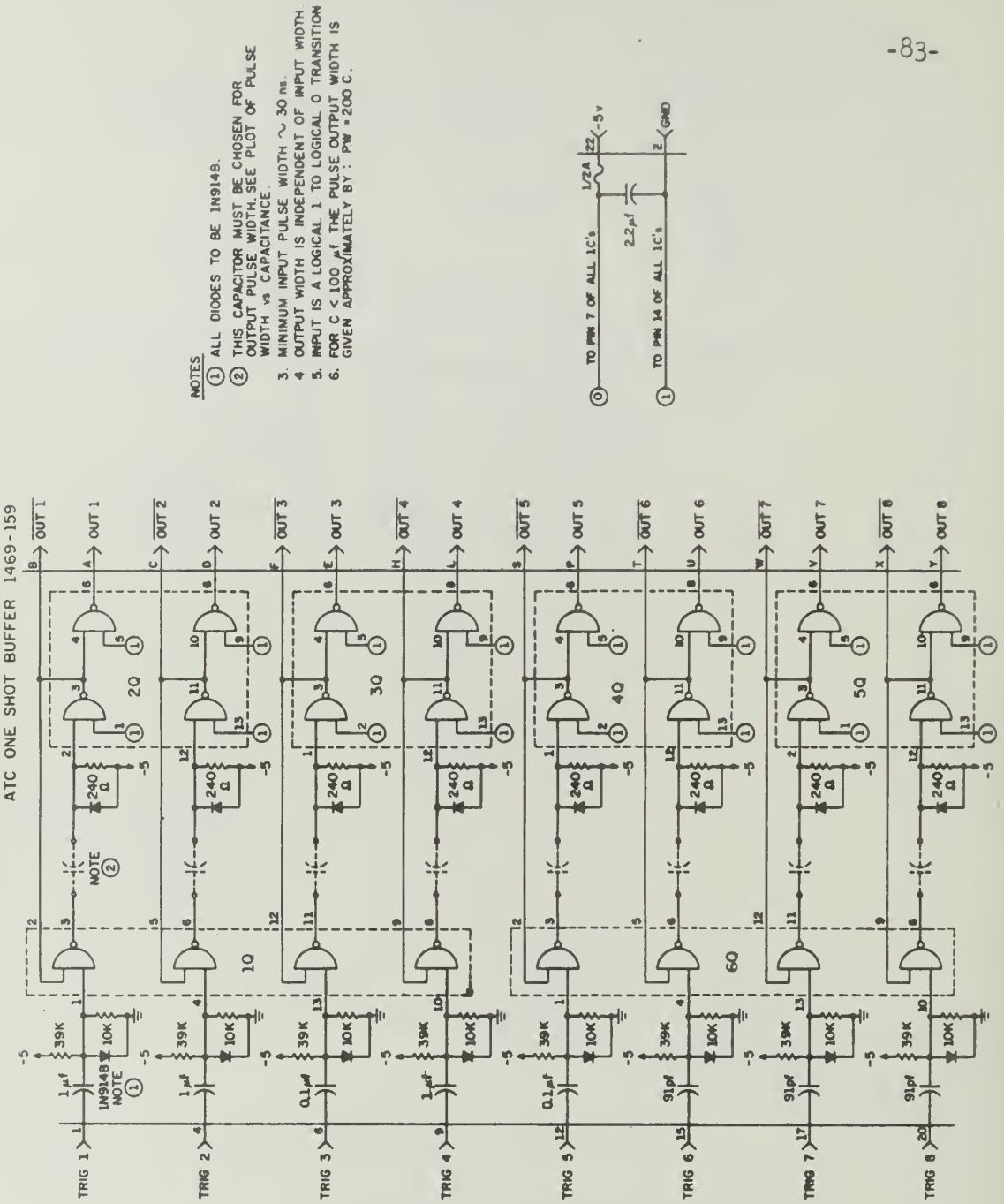

Figure 31. One Shot Buffer 1469-159

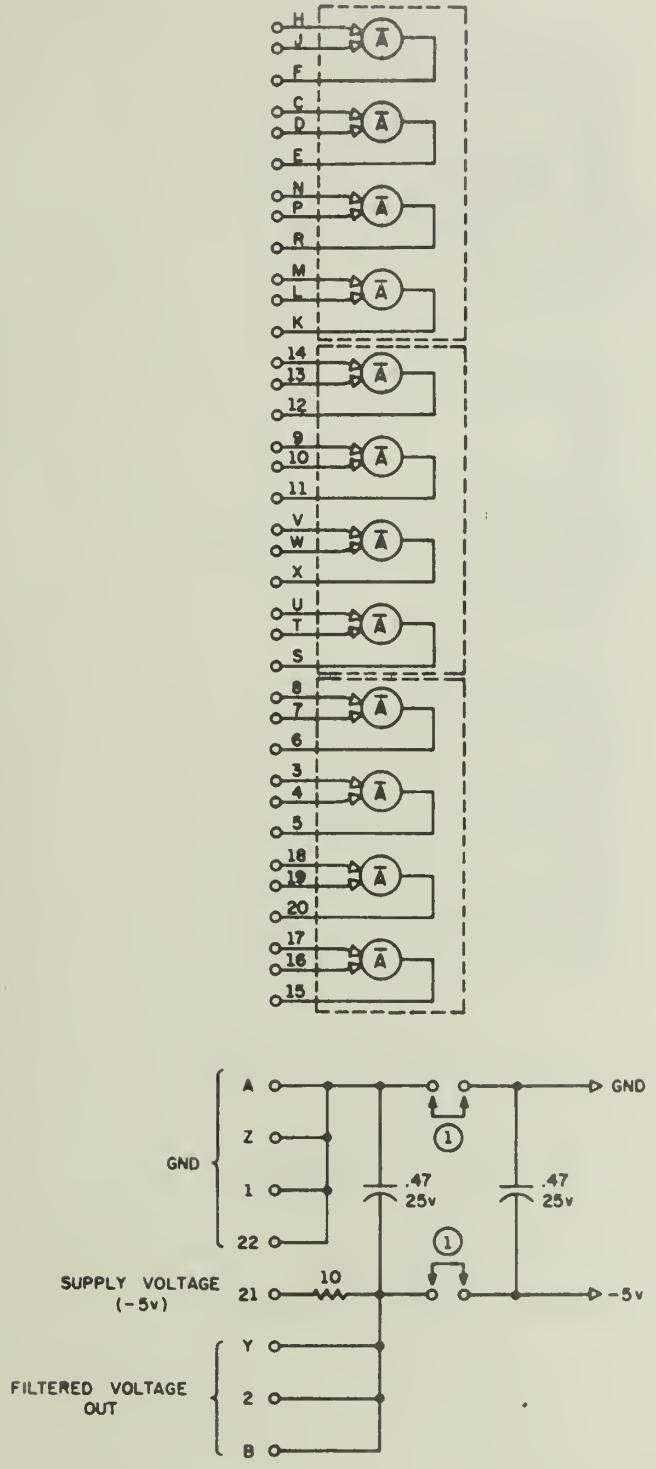

NOTES

(1.) JUMPERS ALLOW POSITIVE OR NEGATIVE OPERATION

2. ALL CIRCUITS TEXAS INSTRUMENTS SN7400N

Figure 32. General 2-Input Nand 1469-161

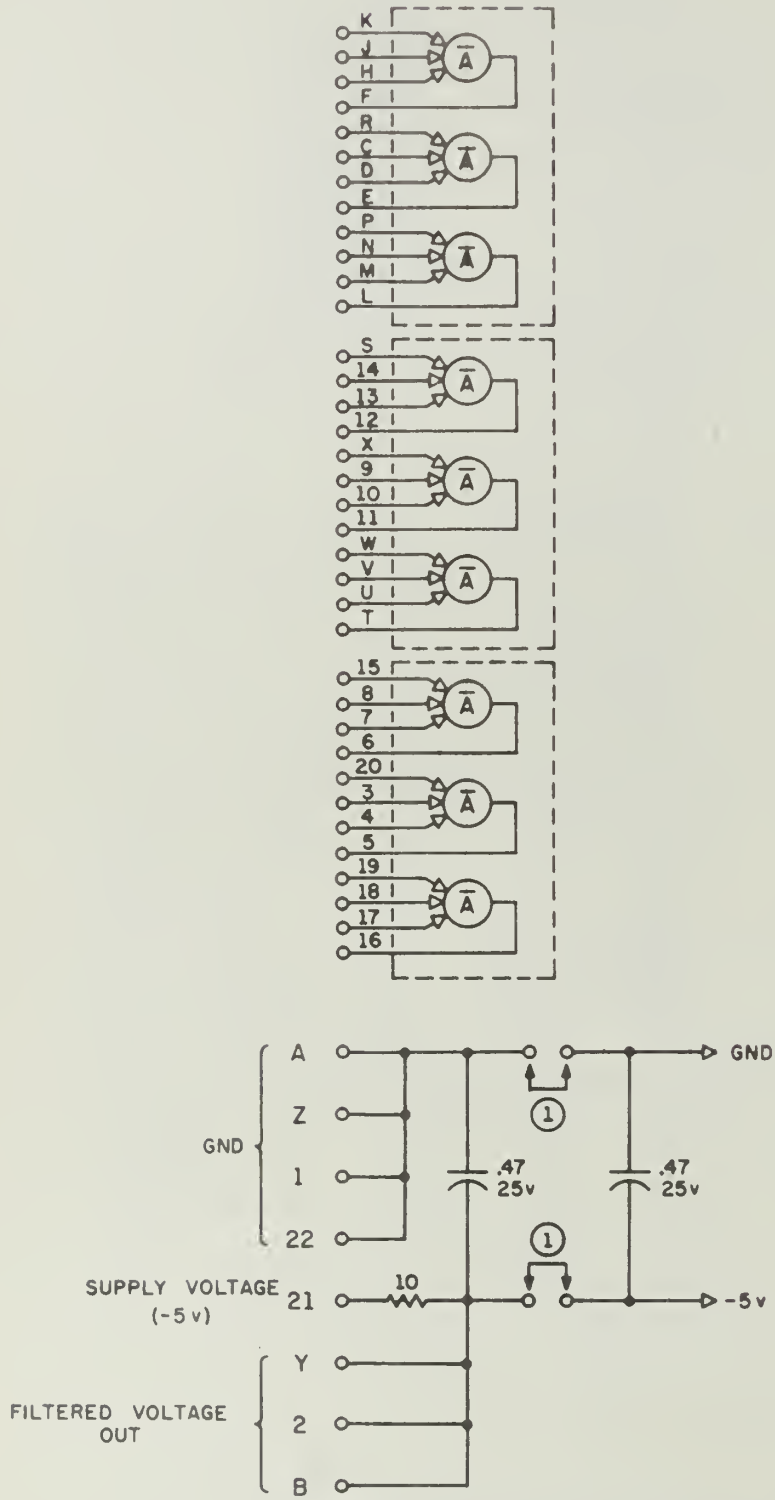

NOTES

(1) JUMPERS ALLOW POSITIVE OR NEGATIVE OPERATION

2. ALL CIRCUITS TEXAS INSTRUMENTS SN7410N

Figure 33. General 3-Input Nand 1469-162

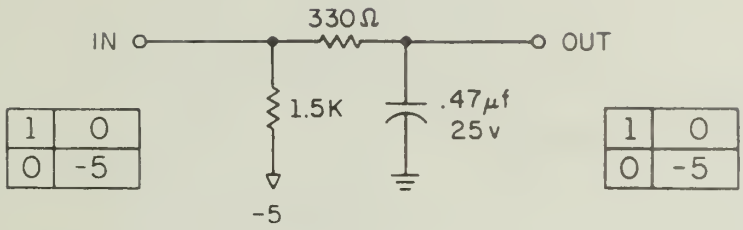

NOTES

1. ALL RESISTORS 1/4 W, 5%.
2. SEE NEXT PAGE FOR PIN CONNECTIONS.

1469-173 FILTER

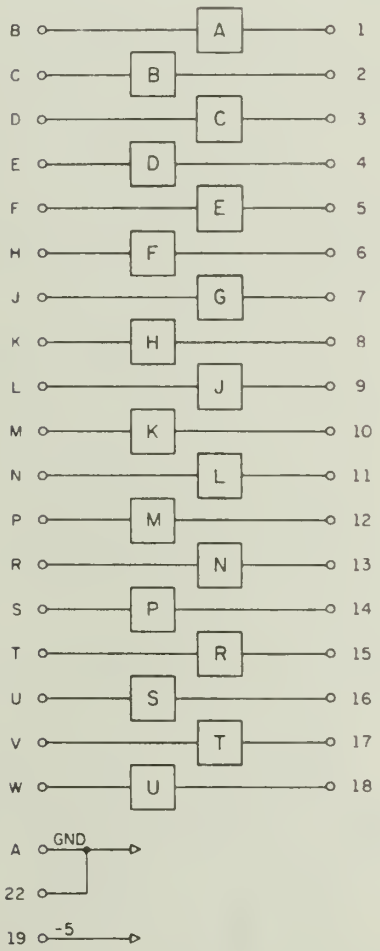

Figure 34. Switch Filter 1469-173

ATC LOGIC TO VIDEO CONVERTER 1469-175

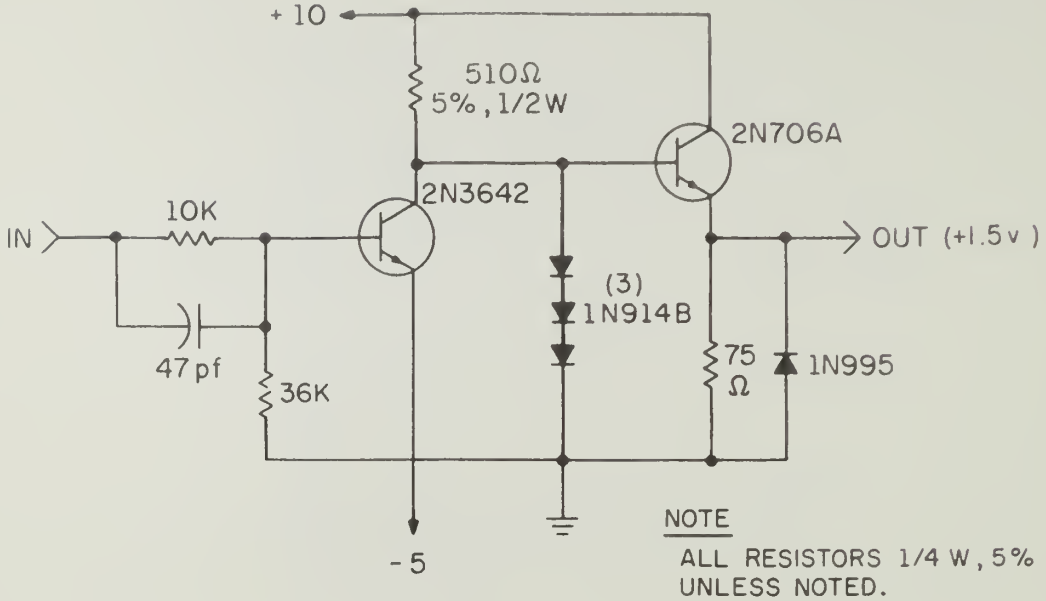

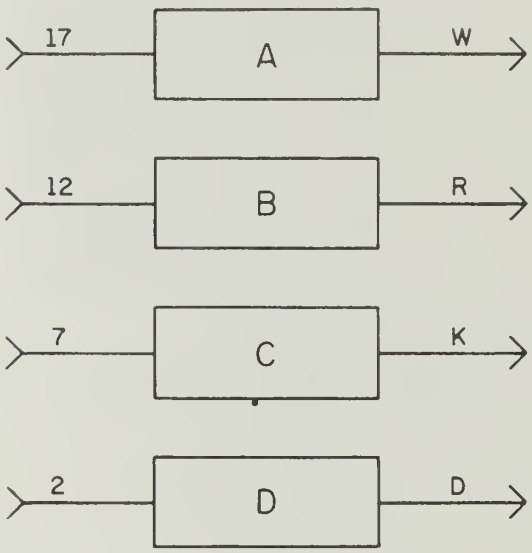

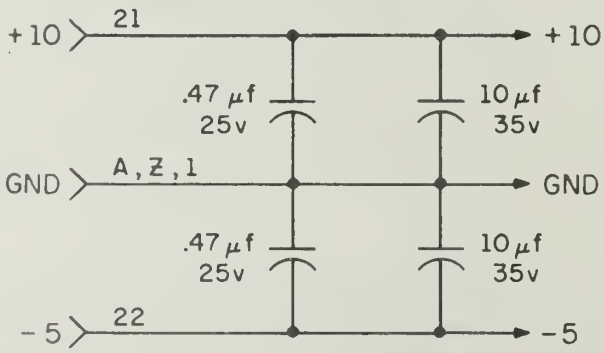

Figure 35. Logic to Video Converter 1469-175

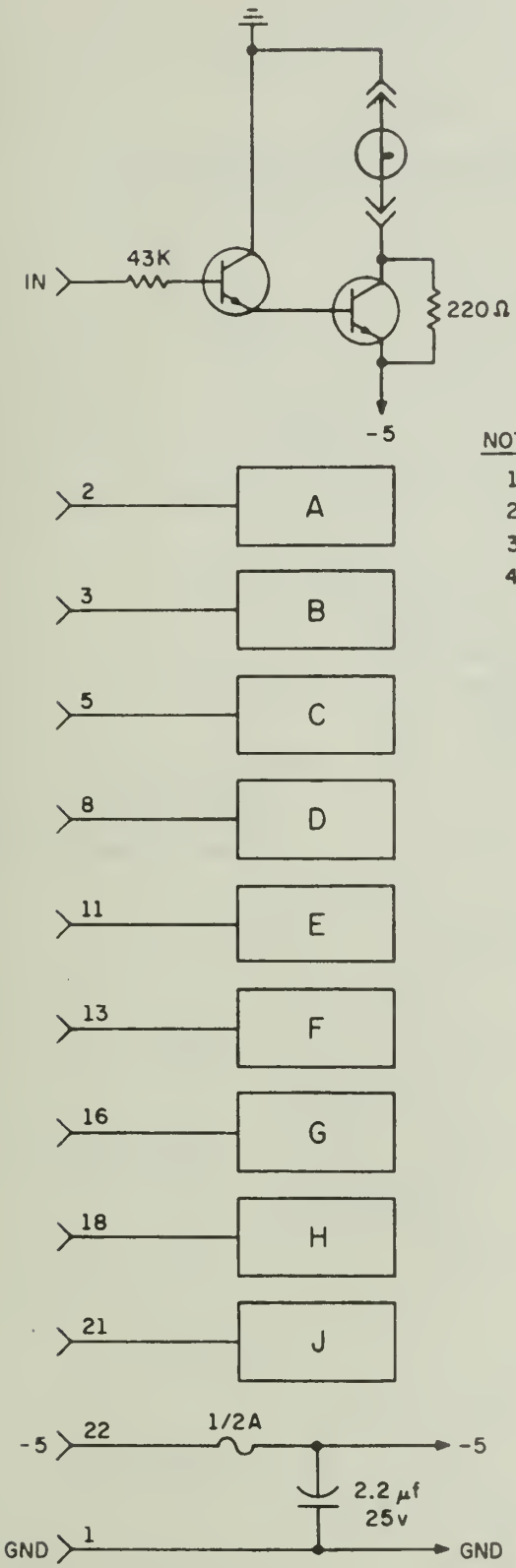

NOTES

1. ALL RESISTORS 1/4W, 5%
2. ALL TRANSISTORS 2N3642
3. BULBS 6v/40ma (SAME AS 1469-115)
4. SOCKETS FOR BULBS

Figure 36. Indicator 1469-176

ATC VIDEO TO LOGIC CONVERTER 1469-177A

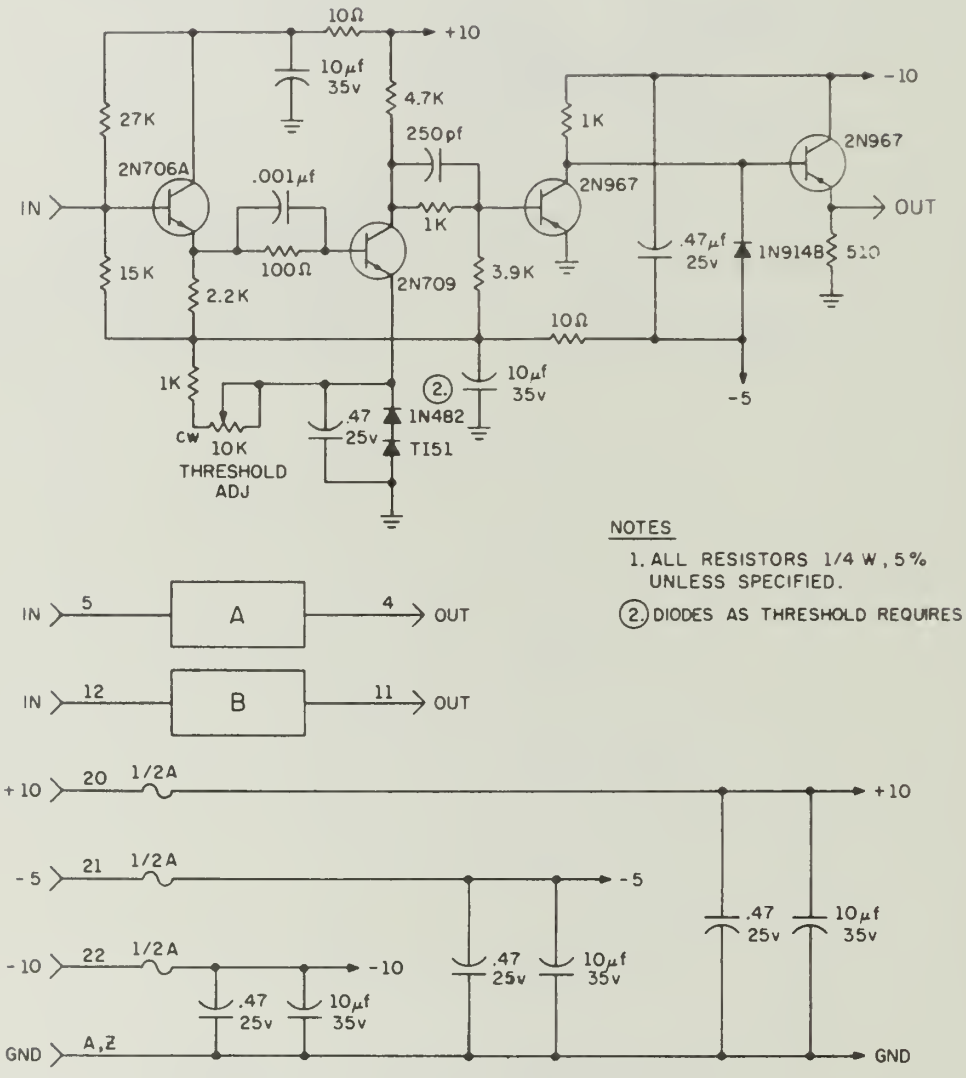

Figure 37. Video to Logic Converter 1469-177A

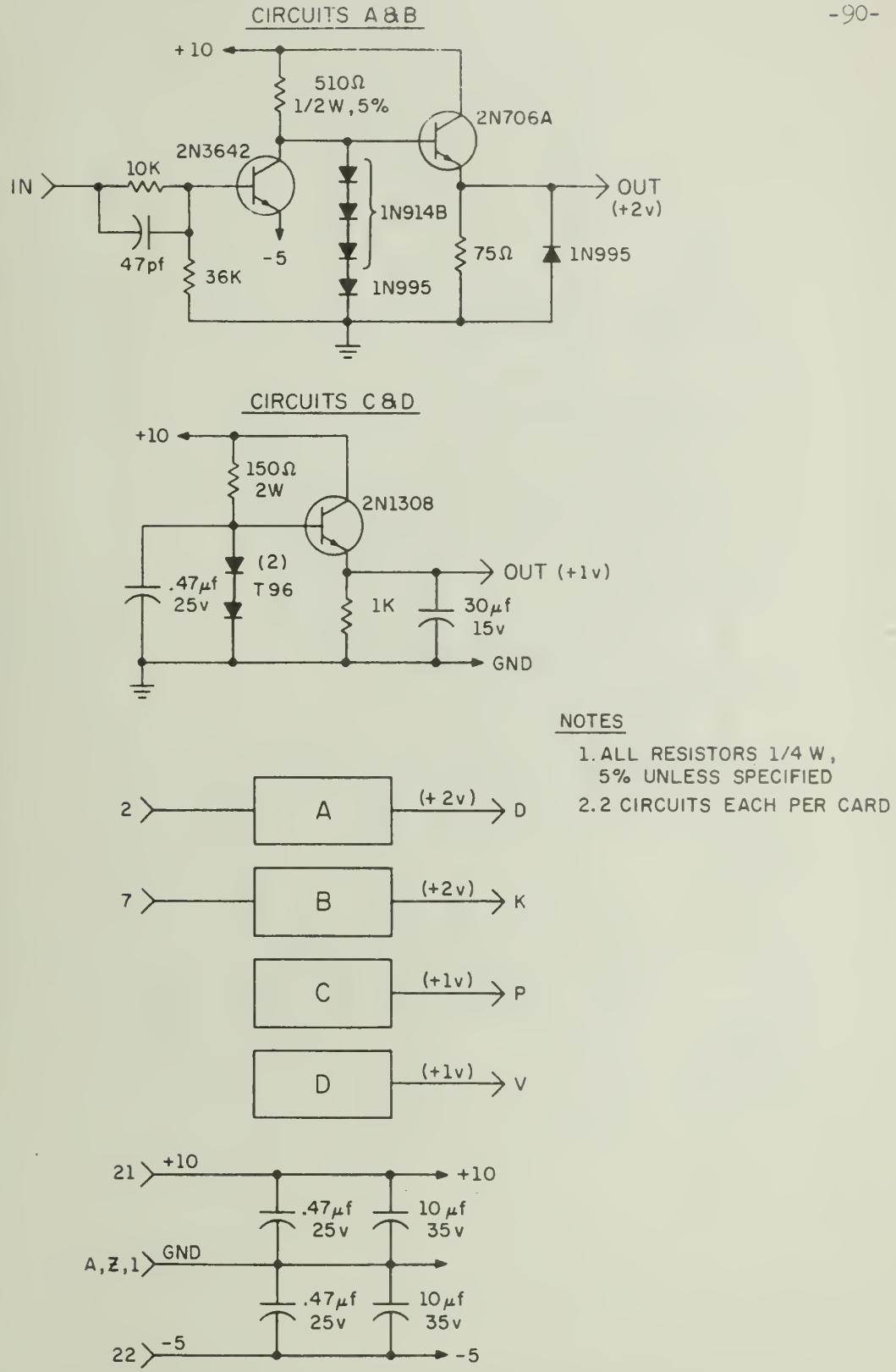

Figure 38. +1 Volt Power Supply/Mode Switch 1469-178

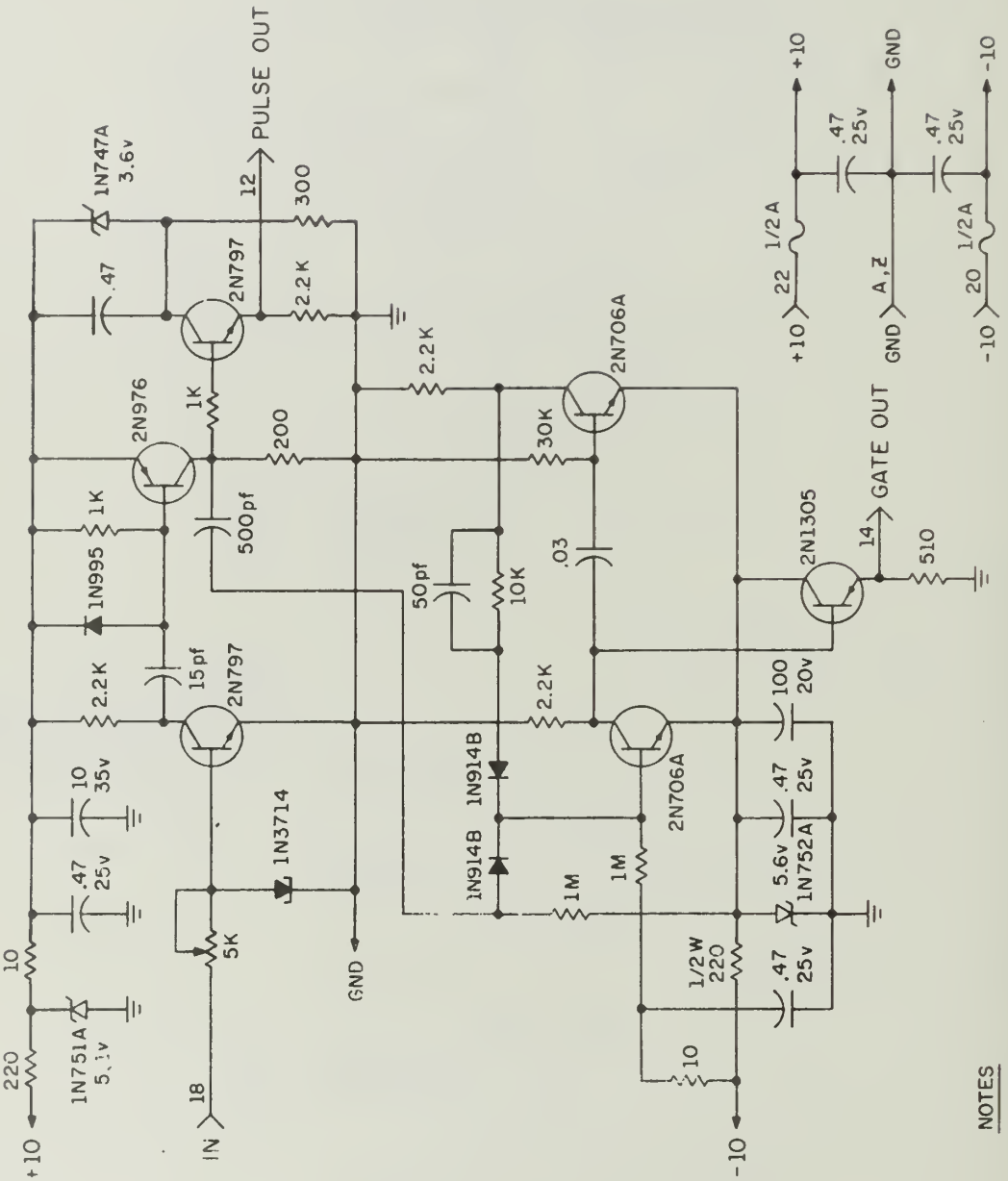

Figure 3. Pen Shaper and Gate 1469-179

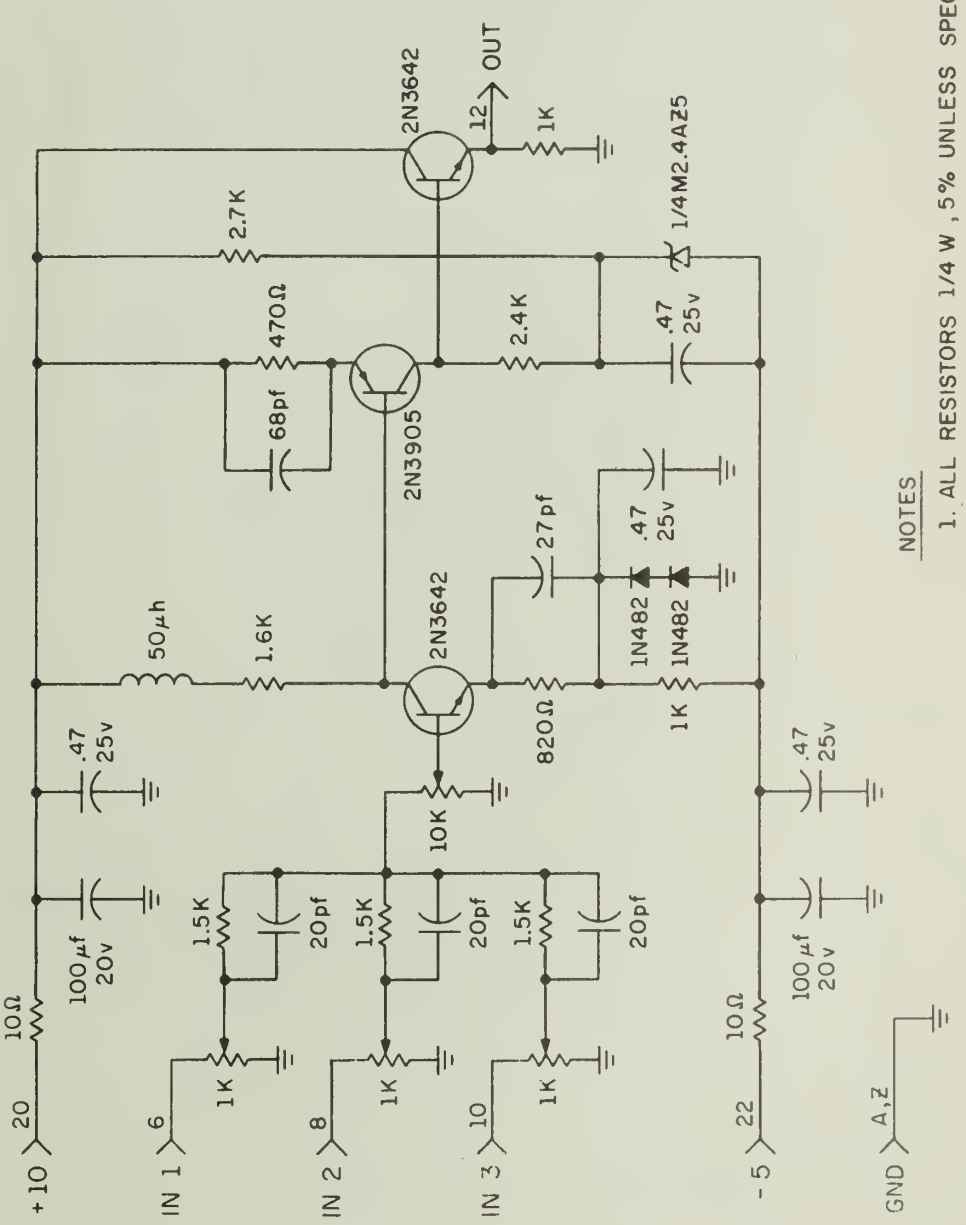

Figure 40. 3-Input Video Adder 1469-180

1469-181-20 4-INPUT NAND

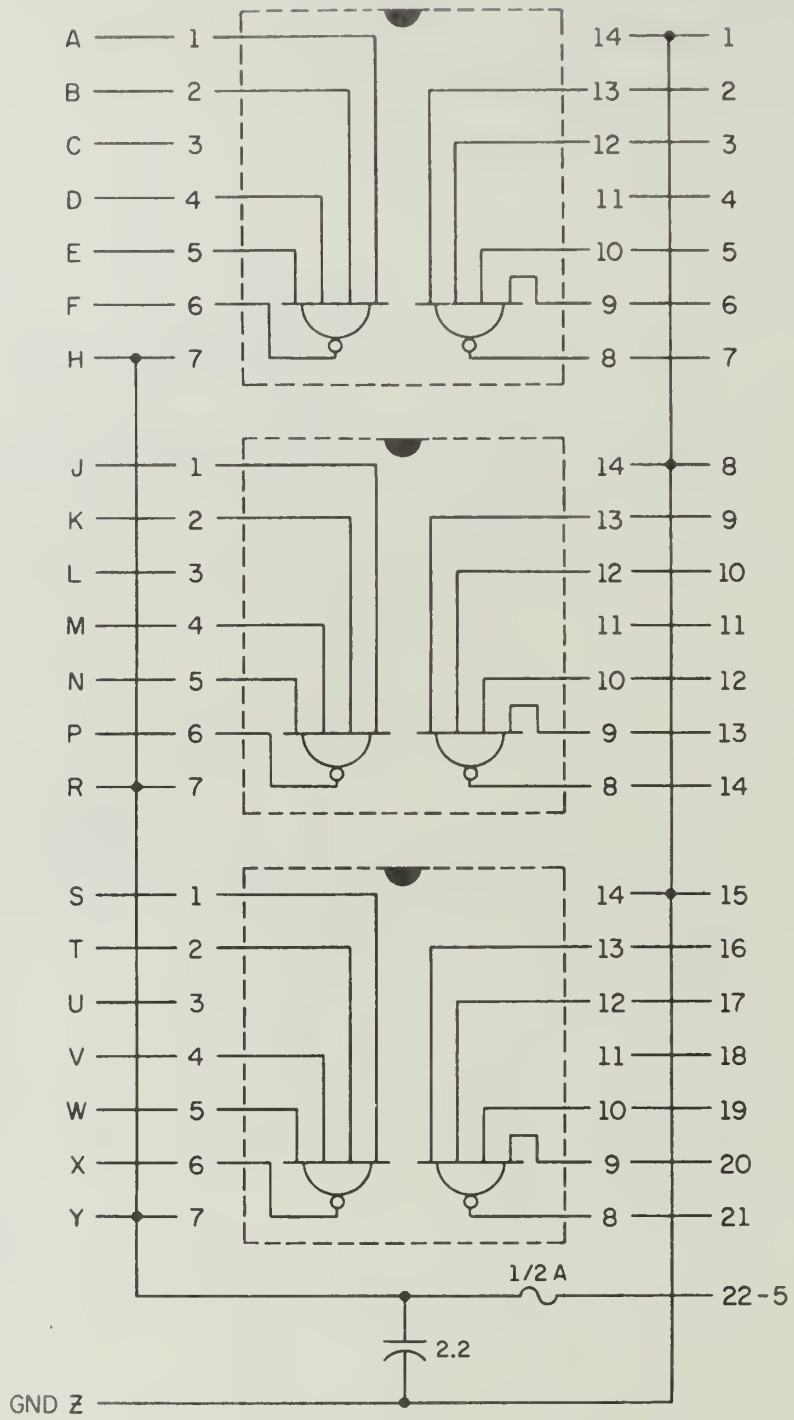

NOTES

1. CIRCUITS ARE TEXAS INSTRUMENTS SN7420N

Figure 41. General 4-Input Nand 1469-181-20

1469-181-70 J-K FLIP-FLOP

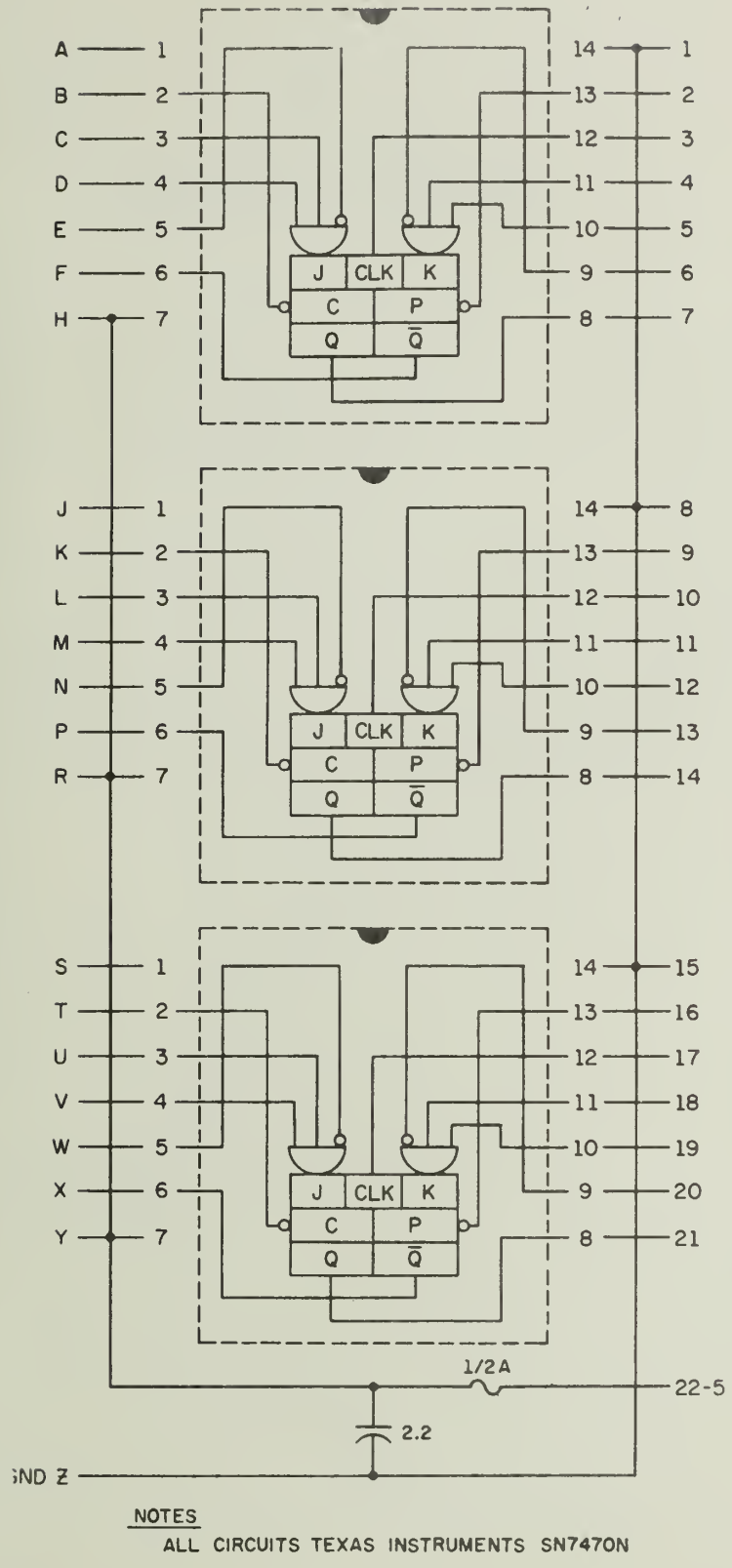

Figure 42. General J-K Flip Flop 1469-181-70

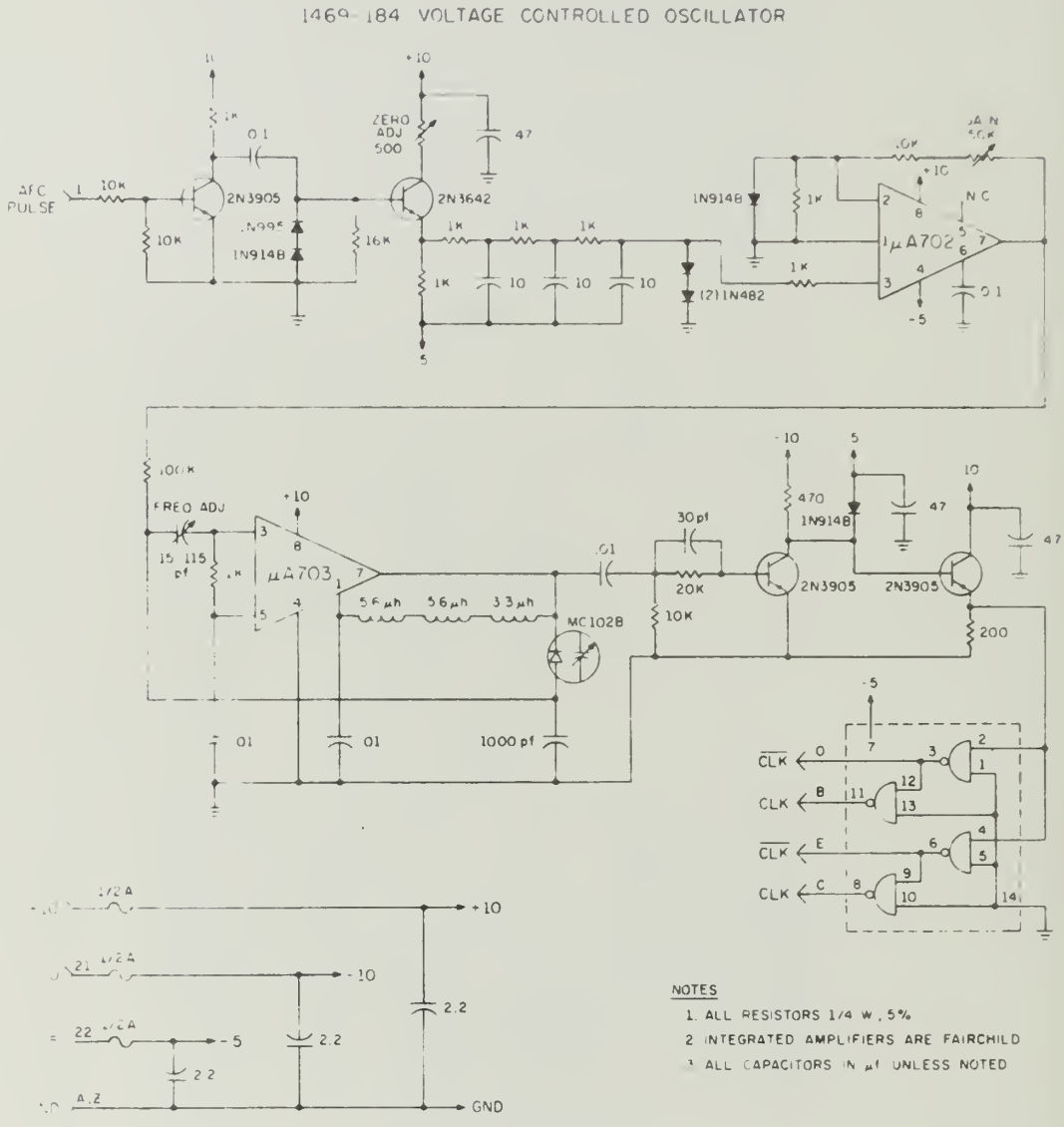

Figure 43. Voltage Controlled Oscillator

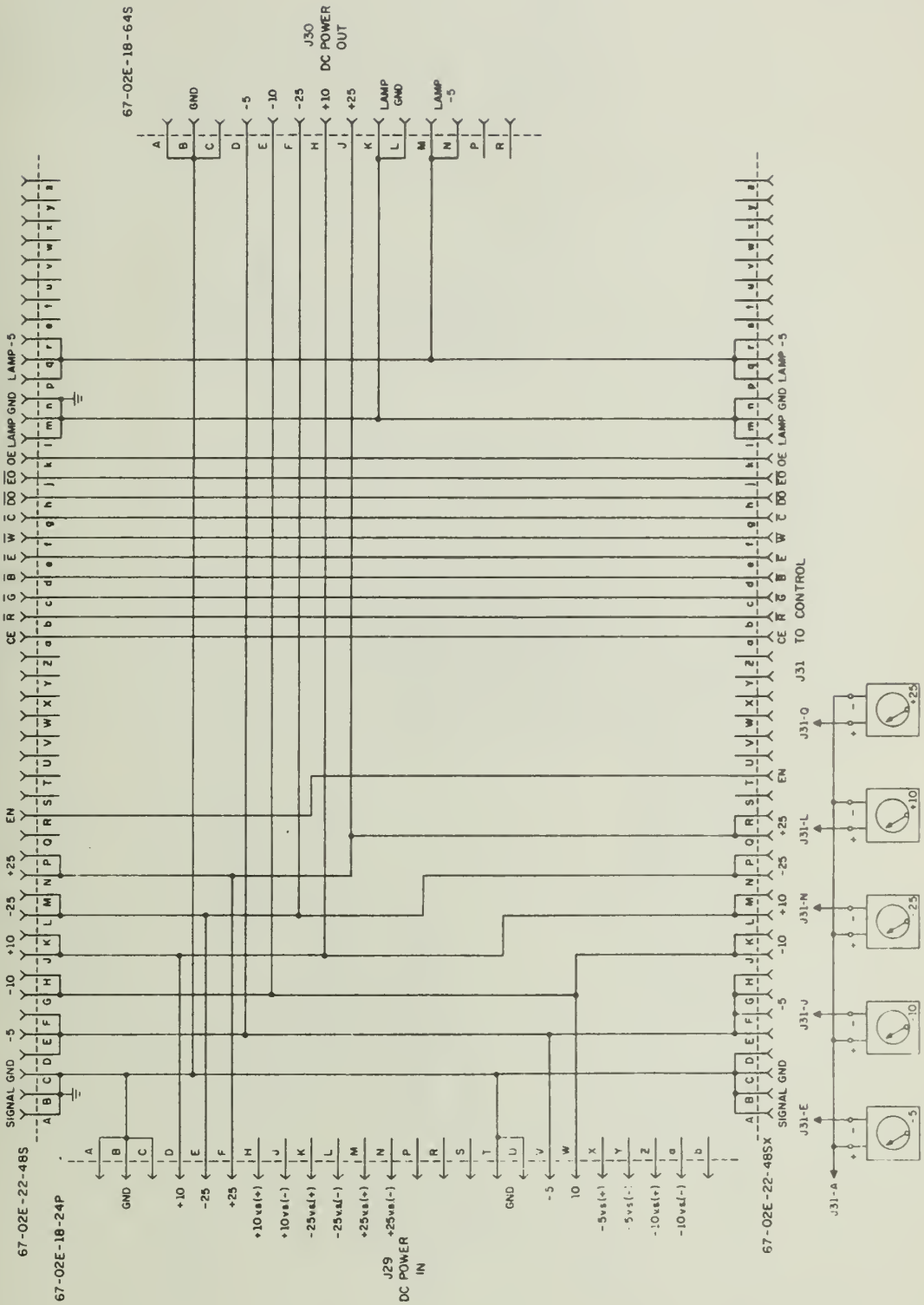

Figure 44. Main Junction Box

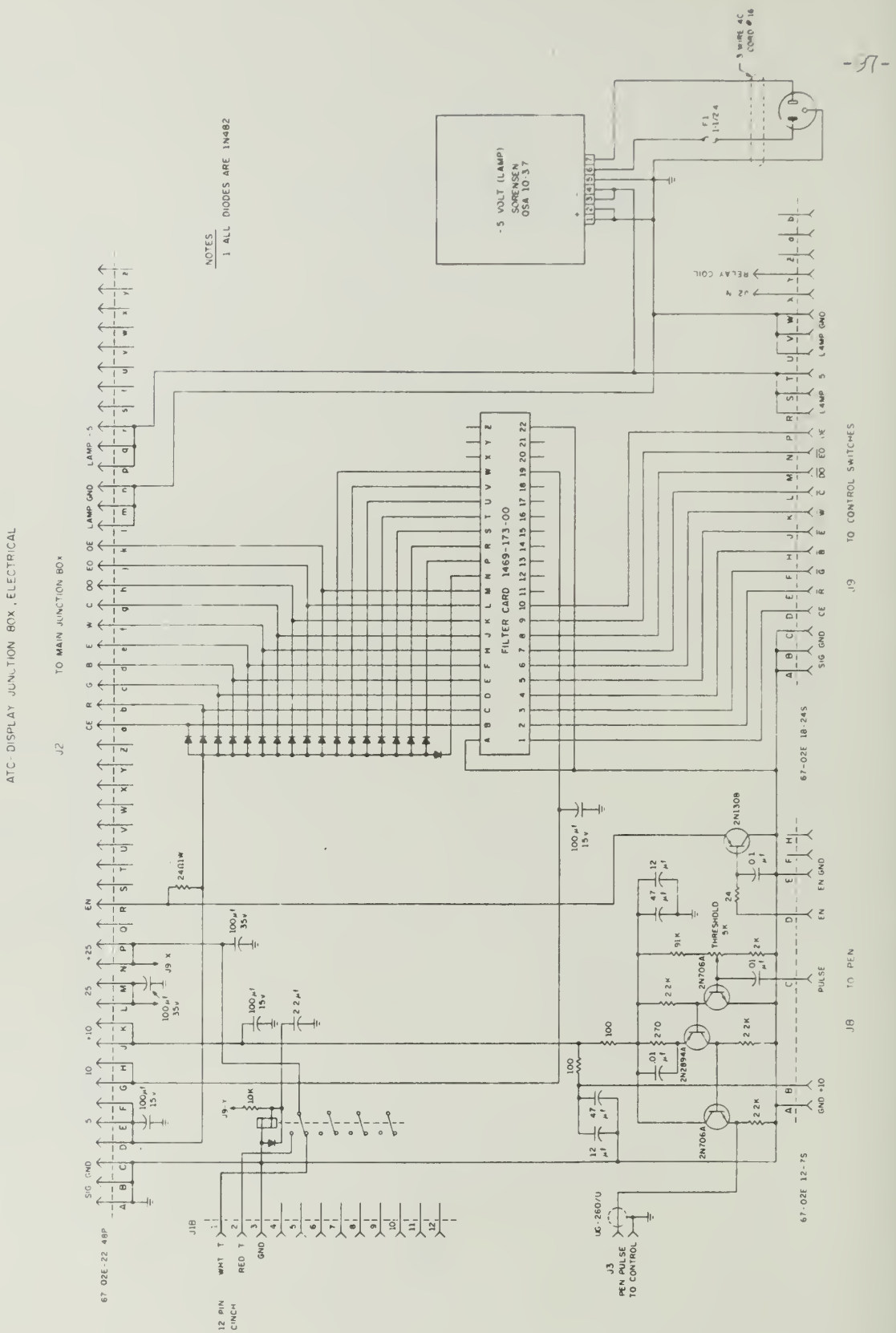

Figure 45. Display Junction Box

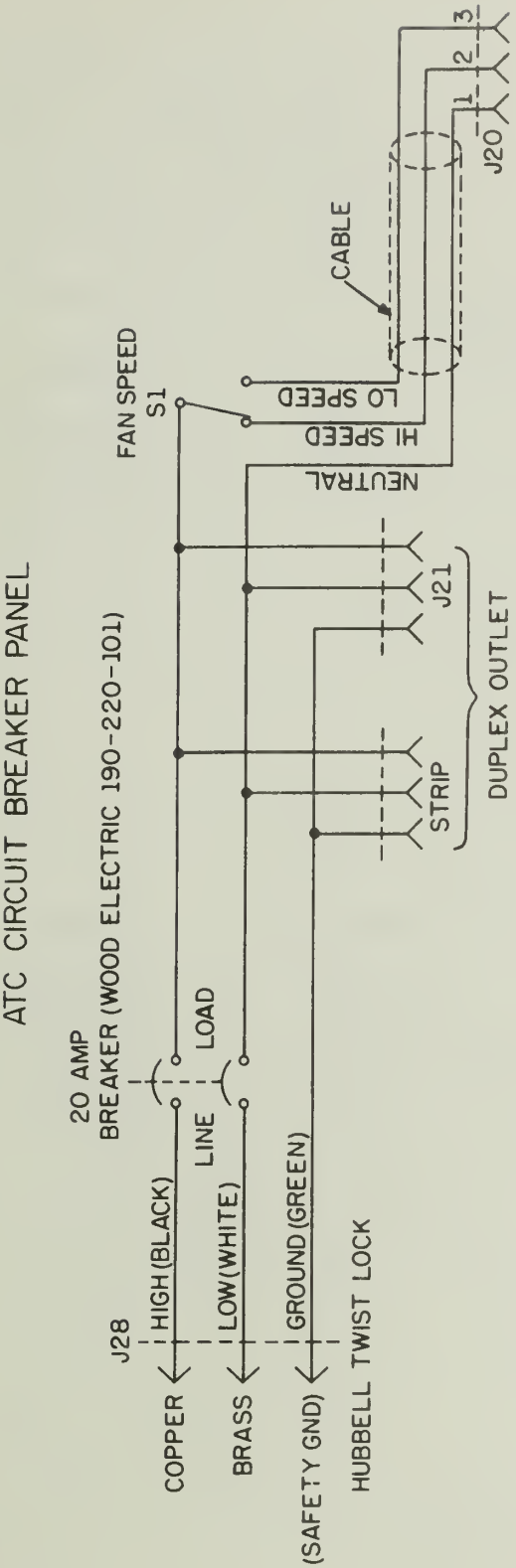

Figure 46. Circuit Breaker Panel

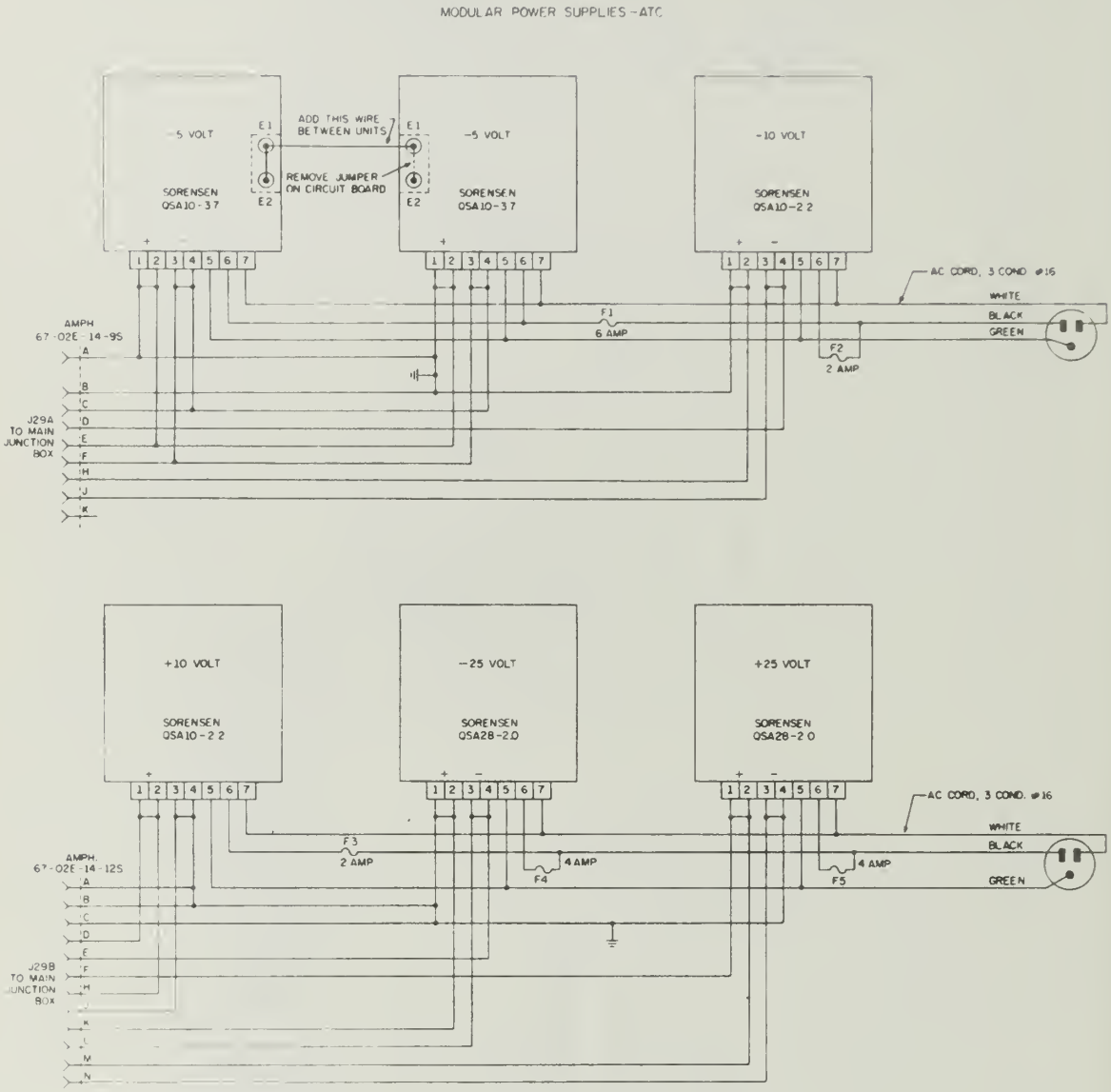

Figure 47. Modular Power Supplies

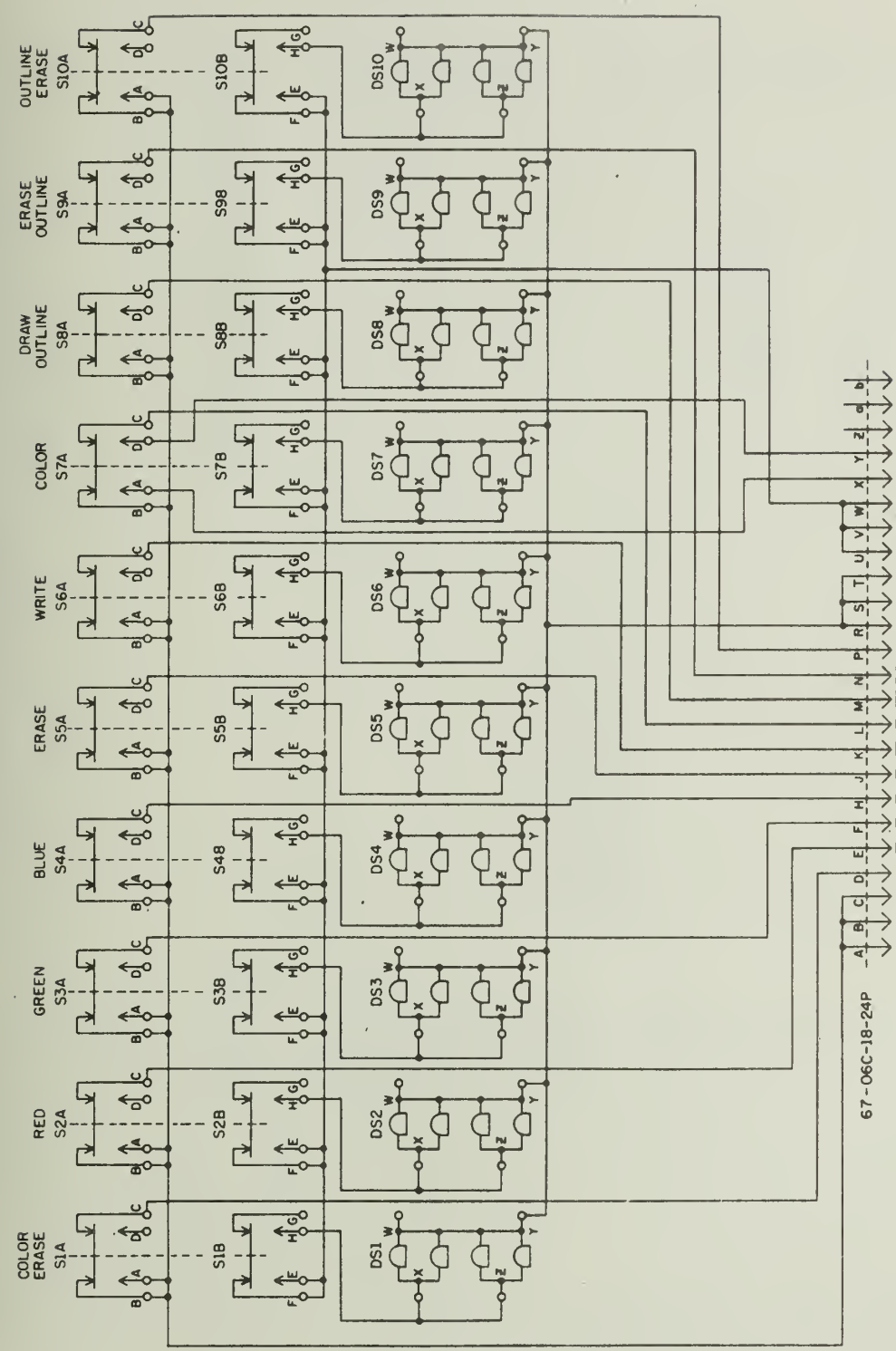

Figure 48. Switch Panel

ATC - CABLE DETAILS

DETAIL CABLE #29

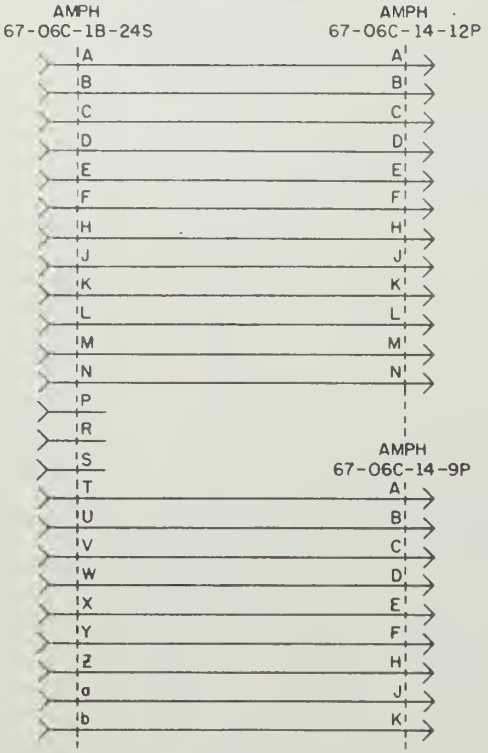

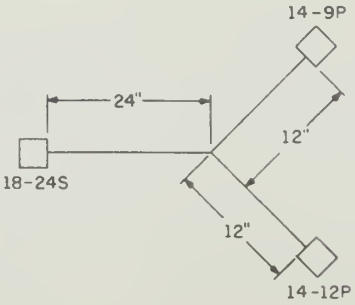

NOTES:
1. USE "Y" SLEEVING IF AVAILABLE.
2. ALL WIRE #18 STRANDED.
3. CABLE COVERED WITH VINYL SLEEVING.
4. WRAP TAPE ON CABLE AT CLAMPS IF NECESSARY IN ORDER TO OBTAIN FIT.

DETAIL CABLE #18

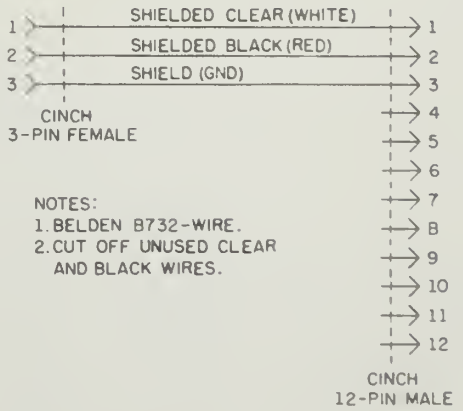

NOTES:
1. BELDEN 8732-WIRE.
2. CUT OFF UNUSED CLEAR AND BLACK WIRES.

LIGHT PEN CABLE DETAIL, CABLE #48

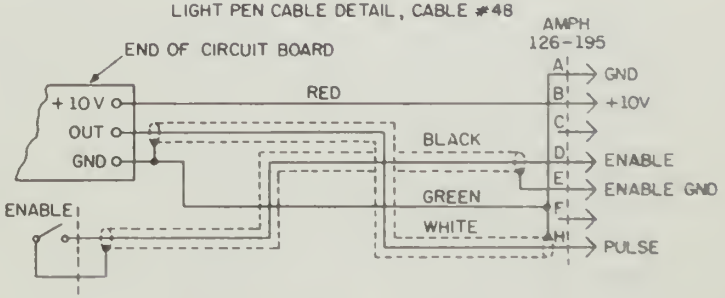

NOTES:
1. WIRE IS BELDEN 8491 COILED MICROPHONE CABLE.
2. THE SHIELDED WIRE TO THE ENABLE SWITCH SHOULD BE CONNECTED INDEPENDENTLY OF THE CIRCUIT BOARD.

DETAIL CABLE #B

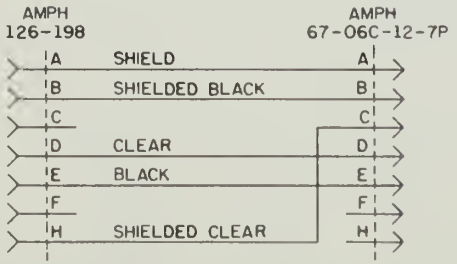

NOTES:
1 THE 126-19B CONNECTOR IS TO BE WIRED AFTER IT HAS BEEN MOUNTED ON PANEL.
2. WIRE IS BELDEN 8732.

Figure 49. Cable Details

A3.0 CARD RACK LISTS

CARD RACK A

1. Switch Matrix
2. Indicator
3. Total Erase Control
4. Logic to Video Converter
5. Blank
6. 2-Input Nand
7. 2-Input Nand
8. +1 Volt Generator/Mode Switch
9. Blank
10. Logic to Video Converter
11. Blank
12. Blank
13. 2-Input Nand
14. Blank
15. Pen Pulse Shaping Circuit
16. Blank
17. Video to Logic Converter
18. Blank
19. 3-Input Video Adder
20. 3-Input Video Adder
21. 3-Input Video Adder

CARD RACK B

1. Level Shifter
2. Horizontal Oscillator
3. Horizontal Counter
4. Horizontal Buffer
5. 9-Bit Register and Coincidence
6. 2-Input Nand
7. Dual 9-Bit Register
8. 9-Bit Register and Coincidence
9. 2-Input Nand
10. 9-Bit Register and Coincidence
11. 9-Bit Register and Coincidence
12. 2-Input Nand
13. Blank
14. Vertical Counter
15. Vertical Buffer
16. 8-Bit Register and Coincidence
17. 2-Input Nand
18. 8-Bit Register and Coincidence
19. 8-Bit Register and Coincidence
20. 8-Bit Register and Coincidence
21.

CARD RACK C

1. One Shot Buffer
2. 4-Input Nand
3. 2-Input Nand
4. 3-Input Nand
5. R-S Flip Flop and 2-Bit Coincidence
6. Indicator
7. R-S Flip Flop
8. 2-Input Nand
9. 2-Input Nand
10. 3-Input Nand
11. J-K Flip Flop
12. Blank
13. Blank
14. Blank
15. Blank
16. Blank
17. Blank
18. Blank
19. Blank
20. Blank
21. Blank .

A4.0 OPERATING PROCEDURE AND ADJUSTMENTS

To operate the Tricolor Cartograph turn on main circuit breaker and allow to warm up for ten minutes. Before using, all tracks of the disc should be erased. This is accomplished by depressing the Outline Erase button and the Color Erase button after depressing all three color selector buttons. Adjust the Contrast control to the one o'clock position and the Brightness control to halfway between one and two o'clock. To write in a color with the pen, select the desired color or combination of colors and depress the Write button. Now hold the pen so that the small white pen marker spot appears on the screen. Depress the Enable button on the pen and it will write. If no pen marker spot can be seen the Brightness control is set too low.

To erase a color with the pen repeat the above procedure but depress the Erase Color button. The colors are selected by the color selector buttons.

Writing or erasing an outline is accomplished in the same manner as above except that the Draw Outline or Erase Outline button is depressed and the color selector buttons have no effect.

To color, depress the Color button, point the pen to the interior of the outline which is to be colored and depress the Enable button. The color is chosen by the color selector buttons.

The entire outline or all of one color may be erased at any time by depressing the Outline Erase button or the Color Erase button. Colors to be erased are selected by means of the color selector buttons. The Outline Erase and Color Erase buttons are independent of all other buttons.

There are several adjustments that can be made to the Tricolor Cartograph. There are numerous adjustments for the color monitor and the video disc. These will not be discussed here. Instructions for these adjustments may be found in the respective manuals for these units. Five circuits in the Processor have adjustments. They are: the Pen Shaping Circuit, the pen thresholding amplifier, the Video to Logic Converter, the 3-Input Video Adders and the Voltage Controlled Oscillator.

The thresholding amplifier should be set at a level which will completely clip the noise pulses generated by the monitor flyback circuit. This should be done after the system is thoroughly warmed up. (~ one hour).

After the threshold circuit has been adjusted the pen shaping circuit should be adjusted so that no extraneous noise pulses appear on the screen.

The Video to Logic Converter can be adjusted to respond only to signals above a certain threshold level. Small adjustments in this level are made with the potentiometer. Large adjustments require that the bias diodes in the circuit be changed. The pen threshold may be set at minimum but the outline threshold can only be as low as is possible without picking up false outline pulses. Neither thresholds must not be set so high that ligitimate pen or outline pulses are clipped.

The 3-Input Video Adders have four gain adjustments, one for each of the 3 video inputs and one for their sum. The video from the disc will be in the range 0.7 to 1.0 volts. The adders should be adjusted so that each of the inputs (video, outline and pen), when used along, produces a 1 volt signal at the output.

There are three adjustments to the Voltage Controlled Oscillator. The zero adjustment provides a means of setting the input to the μA702 to zero when the incoming AFC pulse is at the normal rate (15,750Hz) and width (9.5 μsec). The frequency adjustment capacitor provides a limited range for adjusting the oscillator frequency to 8MHz. Large frequency adjustments must be made by changing the inductance. The gain adjustment allows adjustment of the frequency shift for a given input pulse width change.

BIBLIOGRAPHY

Barney, Walter. "New Terminals in Display Picture," Electronics. January 8, 1968. McGraw Hill Book Co.

Bycer, Bernard B. Digital Magnetic Tape Recording: Principles and Computer Applications. Hayden Book Co., Inc., New York, 1965.

Esch, J. W., et al. Artrix Final Report, Report #238 Digital Computer Laboratory, University of Illinois, Urbana, Illinois, June 20, 1967.

Glasford, Glenn M. Fundamentals of Television Engineering. McGraw Hill Book Co. 1955.

Giles, James N. Fairchild Semiconductor Linear Integrated Circuits Applications Handbook. Fairchild Semiconductor, Mountain View, California, 1967.

Hendrickson, Herbert C. A High-Precision Display System for Command and Control Information Display. July/August, 1967.

Howard, James N., Ed. Electronic Information Display Systems. Spartan Books, Washington, 1963.

Kiver, Milton S. Color Television Fundamentals. McGraw-Hill Book Co. New York, 1964.

Kubitz, W. J. Quarterly Technical Progress Report, Digital Computer Laboratory, University of Illinois, Urbana, Illinois. October, November, December, 1966. #C00-1469-0064.
Also: January, February, March, 1967 C00-1469-0071
July, August, September, 1967 C00-1469-0073
January, February, March, 1968

Poole, Harvey H. Fundamentals of Display Systems. Spartan Books, Washington, 1966.

Richards, R. K. Electronic Digital System. John Wiley and Son, Inc. New York, 1966.

Risko, Frank D. "Design Factors in Magnetic Pulse Recording." Electro-Technology, December, 1967.

Southworth, Glen R. "A Magnetic Disc Video-Scan Converter," a paper presented at the 102nd Technical Conference of the SMPTE, September 17-22, 1967.

VITA

William John Kubitz was born in Freeport, Illinois, on December 27, 1938. He graduated from Freeport High School in 1957. In 1961 he received his B.S. in Engineering Physics from the University of Illinois. He received his M.S. in Physics from Illinois in 1962. From 1962 to 1964 he was a development engineer with the General Electric Company. In 1964 he returned to the University of Illinois to work toward a Ph.D. in Electrical Engineering. He is a member of the IEEE.

JAN
JAN 29 1973

BOUND BY
HNM

UNIVERSITY OF ILLINOIS-URBANA
3 0112 002022835